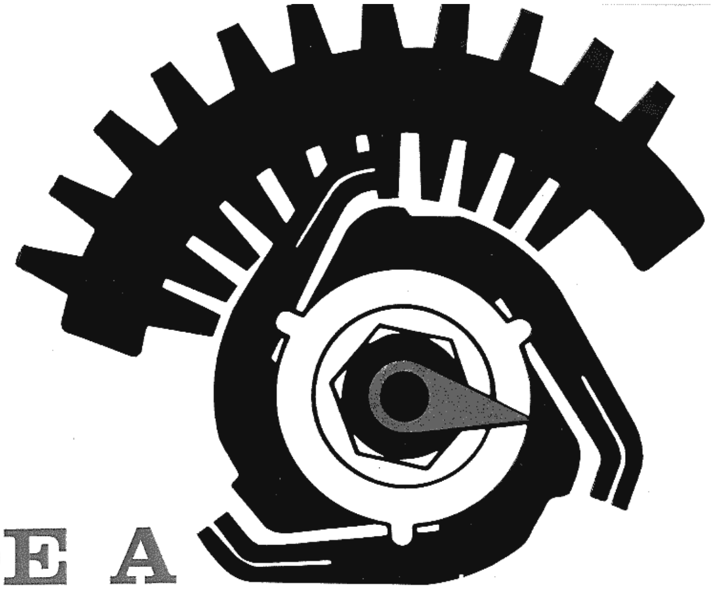

# INSIDE A DIGITAL VOLTMETER

By SAM MESSIN / Instrument Assembly Manager, Non-Linear Systems, Inc.

*A complete analysis of a stepping-switch type instrument, its circuit details, along with its operating principles.*

DURING the past decade, the digital voltmeter has become a familiar device, finding numerous applications in the electronic field, in production-line testing, missile check-out systems, and many other areas of industry.

The fundamental purpose of the digital voltmeter is to make a highly accurate measurement quickly with practically no chance of error. This is possible because the measurement is displayed in easy-to-see numbers complete with correct polarity sign and properly placed decimal. The displayed reading can also be automatically recorded, again reducing any chance of error.

Depending on requirements, digital voltmeters are available that can take a reading in a second or two, up to speeds as high as several hundred readings per second. Digital voltmeter accuracies of .01% of the readings are typical, so that a four-digit display will show a resolution of one part in ten thousand.

Just as a regular moving-coil meter can be used as a voltmeter or ohmmeter, the digital voltmeter can be built as an ohmmeter by proper circuit modifications. The digital ohmmeter has all of the above-mentioned advantages of the digital voltmeter.

Because the digital voltmeter is a unique type of electronic instrument rather unlike most other electronic devices, we will describe a digital voltmeter beginning with basic ideas, building up to the more sophisticated circuitry that is employed in an actual working instrument.

## The Potentiometer Principle

Fig. 1A illustrates a simple potentiometer circuit, the basis for most digital voltmeters. As shown in the figure, an unknown voltage can be determined by simply adjusting the voltage divider until the reference voltage is equal to the unknown voltage. In this figure, the galvanometer indicates zero current flow when electrical balance exists. The voltmeter then indicates the voltage at balance. Note that when a zero condition exists, there is no load on the voltage being measured.

In order to produce a digital voltmeter which is capable of indicating voltages at a millivolt or sub-millivolt level, some means of amplification must be used. A conventional practice is to sample the unknown voltage with an electro-mechanical chopper so as to produce an a.c. signal which may be readily amplified. Such a circuit is shown in Fig. 1B.

Basically, a chopper is a single-pole double-throw switch which, in this application, is actuated by an electro-magnetic coil assembly connected to a 60-cps source. As shown in Fig. 1B, the chopper arm swings between the unknown input voltage and the reference voltage, generating a voltage waveform at the chopper arm. This waveform is a 60-cps square wave whose peak-to-peak amplitude is the difference between the unknown voltage and the reference voltage. A series of waveforms is shown in Fig. 2. This figure illustrates the chopper output under various conditions of input voltage and reference voltage.

Fig. 3 illustrates an elementary digital voltmeter using a chopper and an amplifier. The reference voltage is applied to a voltage divider which has been assembled around a 10-position rotary stepping switch. The switch arm is "stepped" around these 10 positions by pulsing the stepping-switch coil with the amplifier output. An additional arm is ganged to the divider arm so that both may be driven by the same stepping mechanism. This second arm has its own set of contacts which are used to select and illuminate the correct readout lamps under the appropriate readout numerals. Each numeral, 0 through 9, corresponds to the voltage present at the switch arm of the voltage divider.

To observe the operation of the elementary digital voltmeter shown in Fig. 3, assume that any voltage in one-volt steps, from 0 to 9 volts, is applied as the unknown input. Also assume that one volt or more is sufficient to drive the

Typical four-digit .01-percent-accuracy digital voltmeter.

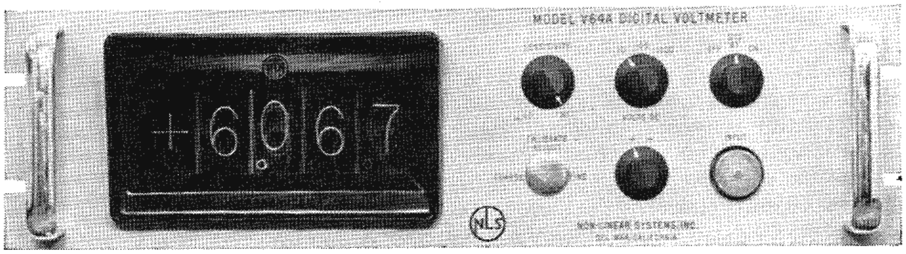

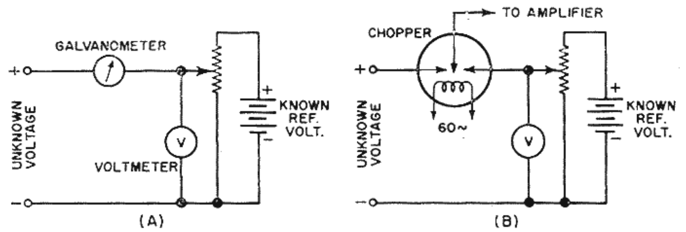

Fig. 1. (A) Potentiometer circuit. (B) Use of a chopper.

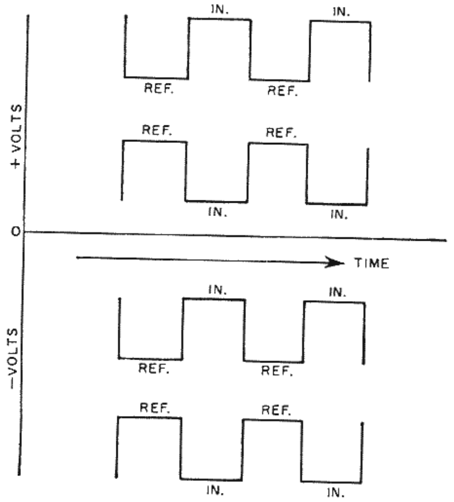

Fig. 2. Chopper output for two cases of positive input voltage and two cases of negative input voltage. Square-wave polarity depends on whether input is greater or less than reference.

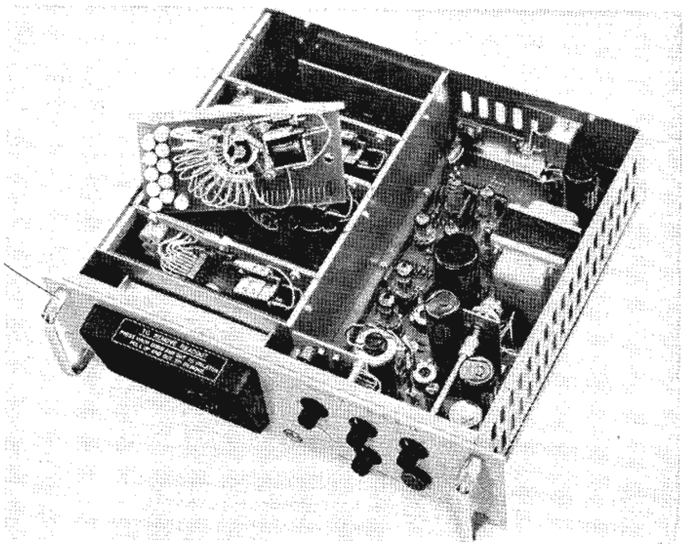

Inside view of the voltmeter discussed. One of the four stepping-switch panels has been unplugged in this photo.

amplifier which, in turn, drives the stepping switch. When these conditions occur, the following facts become evident:

1. With any input from 0 to 9 volts, only one particular position on the reference voltage divider will match the input voltage.
2. All other positions will produce a voltage output of one volt or more at the chopper arm. This is sufficient to drive the amplifier and the stepping switch.
3. The stepping switch will receive one pulse for each full swing of the chopper arm as long as a difference exists between the unknown input voltage and the reference voltage.
4. When the reference voltage-divider output equals the unknown input voltage, no output is developed at the chopper arm, and the amplifier ceases to operate the stepping switch.
5. The second section of the stepping switch connects to a specific readout lamp when balance is reached. An appropriate numeral is illuminated, which corresponds to the reference voltage divider tap and therefore corresponds to the amount of unknown voltage applied.

## A Practical DVM

Although the simplified circuit of Fig. 3 illustrates the principle upon which a digital voltmeter works, considerably more sophisticated circuitry is required to produce a practical instrument. The following discussion, based on the specific circuit used in the *NLS* Model V64A, illustrates some of the details. This instrument does not have automatic range switching or automatic polarity indicating features. Instead, it uses front-panel controls to establish range and polarity.

First of all, the elementary circuit shown in Fig. 3 cannot measure an input voltage of reverse polarity unless the reference voltage is also reversed. Second, like all voltmeters, the digital voltmeter requires a range multiplier to extend its useful range. Third, the chopper must be protected against the inadvertent application of excess voltage.

Fig. 4 shows the circuit changes made to meet these requirements. A polarity-reversing switch has been added to reverse the reference voltage; an input voltage divider and range switch have been added to extend the voltage ranges by ten times and a hundred times; also, a neon lamp and limiting resistor have been added to protect the chopper against accidental high-voltage inputs.

Any practical digital voltmeter must contain an extremely stable voltage source for reference purposes if the instrument is to be consistently accurate over long periods of time. Fig. 5 shows a typical reference supply used in digital voltmeters.

To obtain the precise increments in voltage required of a digital voltmeter, a modified Kelvin-Varley type voltage divider is used. With this modified divider, the value of each decade resistor is the same, thus permitting each decade, along with its stepping switch, to be made into interchangeable plug-in units. Since all decades are interchangeable, production, troubleshooting, and replacement are simple.

As shown in Fig. 6, each decade consists of eleven 5000-ohm resistors. The decade output is selected by a pair of switch arms across two adjacent resistors. The last decade output is shunted by a 12,500-ohm resistor and a 50,000-ohm terminating resistor. A quick calculation will show that the 10,000-ohm output shunted by the 12,500-ohm resistor and the 50,000-ohm terminating resistor, equals 5000 ohms. Therefore, total decade resistance is 50,000 ohms, and 1/10th the decade voltage appears across the output. Each decade is similarly divided and terminated by the next decade.

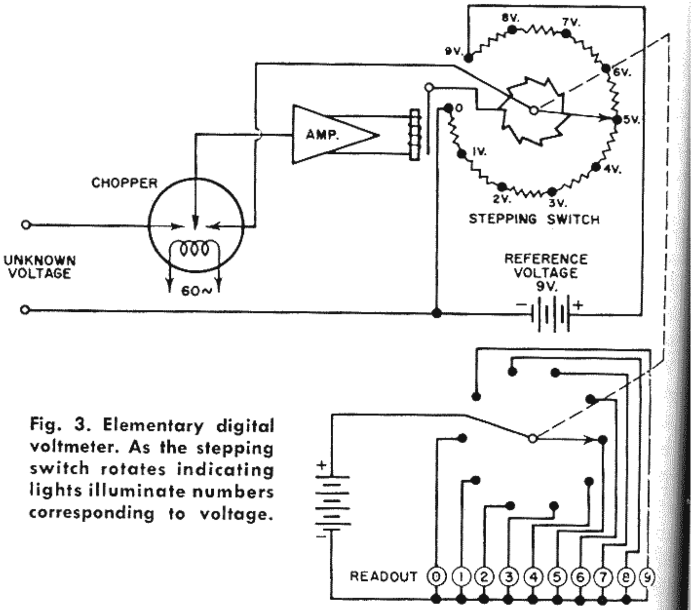

Fig. 3. Elementary digital voltmeter. As the stepping switch rotates indicating lights illuminate numbers corresponding to voltage.

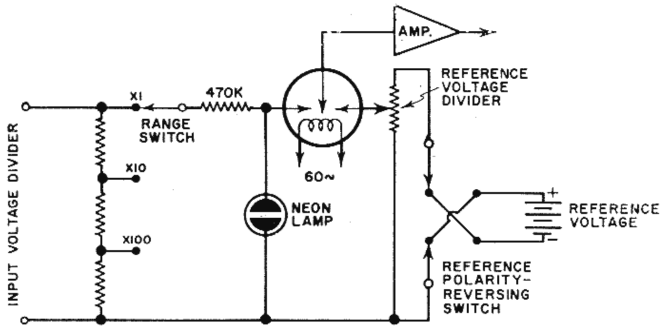

**Fig. 4. Range and polarity switching plus chopper protection.**

By tracing the output of the reference voltage supply into the Kelvin-Varley divider, it will be seen that the voltage output of the most significant decade (on the left) appears across a pair of switch arms. These arms "bracket" a one-volt region of the reference voltage. Once the desired voltage has been bracketed, it is passed on to the following decade which again brackets the voltage, but this time to within one-tenth of a volt. The third decade is now able to select a desired voltage within one-hundredth of a volt. Finally, in the fourth decade, a voltage can be selected in the millivolt region. In Fig. 6, the ten-volt reference has been bracketed down to produce a voltage of 4.321 volts.

It can be seen from the foregoing discussion that an amplifier is needed to balance out voltage increments which are on the order of one millivolt. Fig. 7 shows a typical amplifier with two outputs, one in phase and the other of opposite phase to the input. As also shown in this figure, the chopper arm swings between the input terminal and the Kelvin-Varley voltage-divider output, thus generating a square waveform as previously described. Note that the square wave may have either a positive- or negative-going polarity, depending upon whether the input signal is of higher or lower potential than the Kelvin-Varley divider output. The square wave is applied to a cathode-coupled amplifier stage. The second stage is also a cathode-coupled stage which has a variable-resistance coupling between its two cathodes, provided to adjust the digital voltmeter sensitivity. An over-all amplifier gain adjustment is provided at the plate of the second amplifier to compensate for variations in tube and amplifier gain. Phase inversion is required to develop a pair of amplifier output signals which are directly related to the polarity of the original square-wave output of the chopper. This pair of signals is used by the instrument to determine whether the Kelvin-Varley divider is to be driven "up" or "down" in order to seek a balance.

## Manually Operated DVM

Fig. 8 shows the instrument at the present stage of this discussion. We now have a practical instrument, one which can be operated with manual controls so as to provide highly accurate readings. By observing the amplifier output waveform with an oscilloscope, we can determine if the unknown signal is higher or lower than the Kelvin-Varley divider output, and adjust the four decades of the divider so as to produce a nulled output. If the output signal reduces but cannot be nulled out when the divider output reaches zero, then reference polarity must be reversed to balance against the input. On the other hand, if the amplifier output is reduced but not nulled out when the Kelvin-Varley divider is at maximum, then the input signal is greater than the reference voltage, and the input divider must be brought into action with the range switch. The Kelvin-Varley divider is then re-adjusted for a null.

The readout lamps are wired to ganged switch sections operating with each Kelvin-Varley decade. Plus or minus polarity is indicated by operating similar plus or minus readout lamps also ganged with the polarity switch. The proper decimal points are indicated by means of the decimal readout lamps that are ganged to the range switch.

## Automated DVM

In order to automate this digital voltmeter, the amplifier outputs must be processed to drive the stepping switches. Since considerable power is required to drive stepping switches, only a very few types of electron tubes are suitable as drivers. The type 2D21 miniature thyratron lends itself well to this purpose.

Fig. 9 illustrates circuitry from the amplifier outputs to the thyratrons which drive the stepping switches. Note that the thyratron tubes operate from an a.c. plate supply, thus simplifying power-supply design and automatically extinguishing the thyratrons after each conducting period. A series of waveforms is shown in Fig. 10. These indicate the timing relationships of the circuits from the phase-inverter outputs to the final stepping switch output pulses.

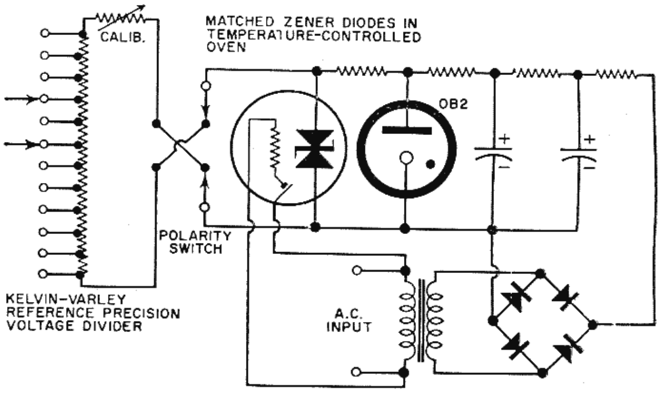

**Fig. 5. Circuit of a typical reference-voltage power supply.**

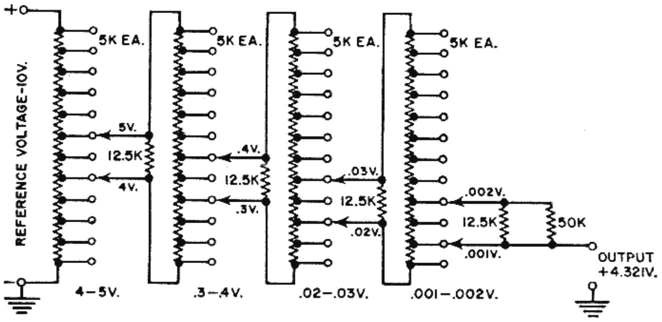

**Fig. 6. A 4-decade Kelvin-Varley divider indicating 4.321 volts.**

**Fig. 7. A typical amplifier circuit with opposite-phase outputs.**

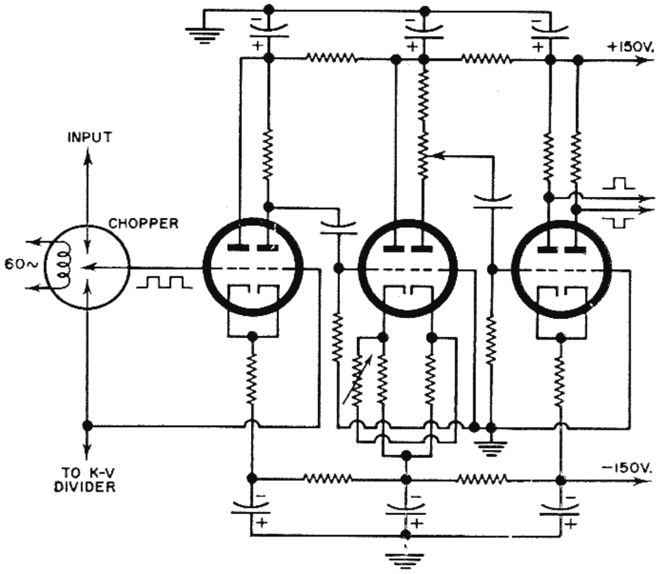

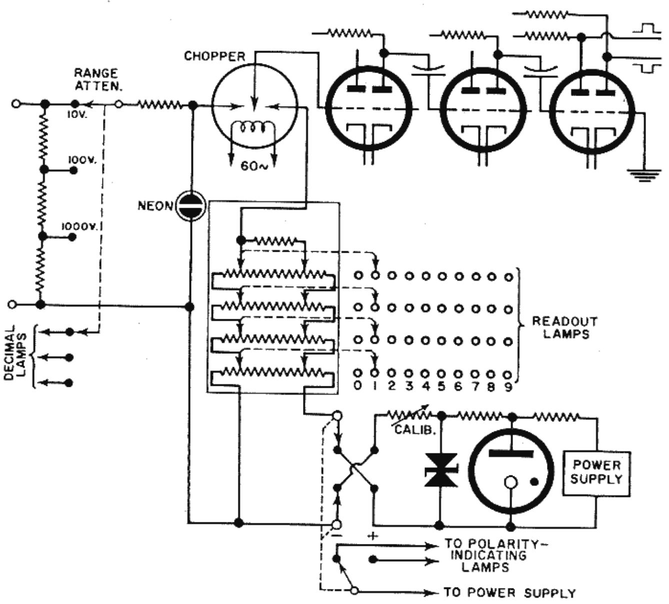

Fig. 8. Simplified circuit of manually operated digital voltmeter.

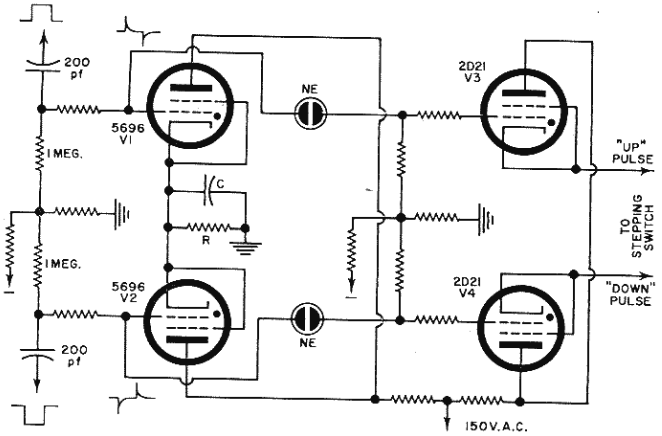

Fig. 9. Four thyratrons are employed to drive stepping switch.

The stepping switch drive circuit consists of a pair of small thyratrons, *V*1 and *V*2, which are actuated by the phase-inverter outputs, and which in turn trigger thyratrons *V*3 and *V*4, the stepping-switch drivers.

These thyratron circuits operate as follows: The square-wave outputs of the phase-inverter stage are differentiated, producing positive pulses corresponding to the leading edges of the positive-going square waves, and negative pulses corresponding to the trailing edges. This pulse polarity is inverted when the square wave is inverted as shown in Fig. 10. These differentiated pulses are applied to a pair of 5696 thyratrons, *V*1 and *V*2, which are normally biased to their cut-off points by a resistive divider. The positive differentiated pulse turns *V*1 on, while the negative pulse applied to *V*2 has no effect. With *V*1 turned on, a large current flows through *R*, the common cathode resistor. The voltage drop across *R* charges *C*, connected across *R*, and also puts *V*2 further into the cut-off state. Once *V*1 is turned on, it remains on until a.c. plate voltage returns to zero at the end of the positive half-cycle. *V*1 and *V*2 would normally be ready for another cycle of operation every 60th of a second except for the delay resulting from the time constant of *C* and *R*. These are proportioned to hold *V*2 or *V*1 in a cut-off condition for a full a.c. cycle after either *V*1 or *V*2 has fired. This is done to provide a frequency-halving action so that the stepping switches operate at a 30-cps rate.

When either *V*1 or *V*2 fires, the ionized interior of the tube creates a low-impedance conducting path from the control grid to the plate. The resulting voltage pulse at the control grid turns on the neon lamp which is coupled to the 2D21 output thyratron. The 2D21 switches on, passing a large current sufficient to operate the stepping switch.

### The Stepping Switches

Stepping switches operate mechanically in one direction. When the electromagnetic driving mechanism is energized, an armature is pulled toward the coil against the force of a helical spring. The action cocks the switch, but does not advance the contacts. When the electromagnet is de-energized, the helical spring returns the armature to its original position. This return movement operates a ratchet so that the rotary contacts will advance one step. In this way, switching occurs only after the driving current has ended; thus the return spring rather than driving current advances the contacts. When the last switch position has been reached, the next pulse advances the switch to the first position again, and additional pulses cause the stepping switch to repeat this cycle.

Both "up" and "down" pulses operate the stepping switches in the same direction of rotation. The manner in which these pulses are routed through the stepping switches determines a sequence of operation which allows a balance to be reached in a minimum number of steps. Both "up" and "down" pulses are usually required to achieve a balance, and several decks of switches are needed to route "up" and "down" pulses.

To follow the operation of the stepping switches and the pulse-switching circuits, assume that all switches are resting at zero as shown in Fig. 11. With the switches in this position, there is no output from the Kelvin-Varley divider and, if no input voltage is present, no "up" or "down" pulses are generated and the instrument remains at zero, electrically at balance.

To demonstrate the "up"-pulse action, assume + .009 volt is applied to the digital voltmeter. The polarity switch must be set to "Plus" and the range switch to the "10-Volt" range. Application of this input voltage will cause the chopper to detect the unbalance, thereby creating a square-wave signal of proper polarity, which results in the "up" thyratron pulsing the first stepping switch—producing the least significant number in the right-hand window. This stepping switch will proceed to step up to the tenth position ("0" equals the first position) decreasing the unbalance at each step until at the tenth position, the +.009 volt from the Kelvin-Varley divider will balance the input voltage applied to the instrument, caus- (*Continued on page* 84)

Fig. 10. Inverter and thyratron waveforms during stepping.

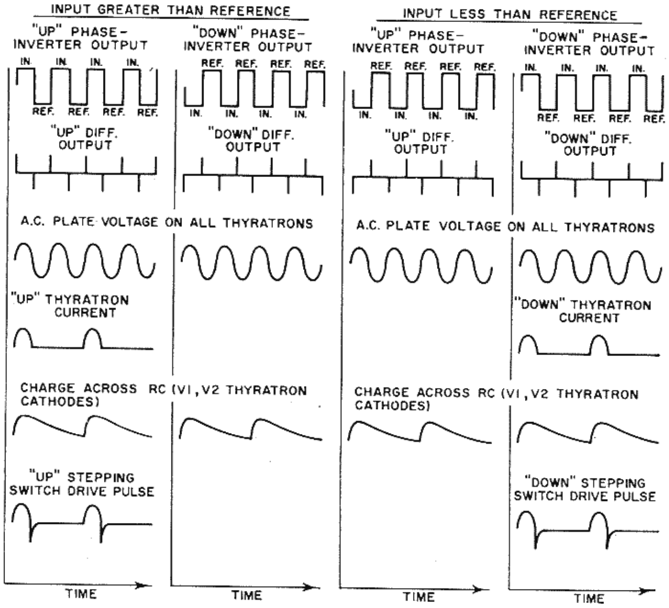

**JOBS LOOK for YOU in ELECTRONICS**

**Learn FAST—EARN FAST with MTI's Unique Exclusive Training at Home.**

Whether it's a BIG PAY JOB you want or the chance to be YOUR OWN BOSS — your big opportunity today is WAITING for YOU in ELECTRONICS! MTI's unique SELECT-A-SKILL method quickly, easily qualifies you for the type of electronic work that's exactly right for YOU — COMMUNICATIONS ELECTRONICS, INDUSTRIAL ELECTRONICS, or RADIO & TV SERVICING. Previous experience proved unnecessary. Age no obstacle. Right at home you *learn by doing*, using your hands as well as your head — building electronic equipment, testing and experimenting with SEVEN BIG MASTER ELECTRONIC KITS! And you can earn while you learn!

**SKILLS PAY BILLS**

With millions unemployed—there is NO PLACE for men without special skills! Let MTI give you the training you NEED to insure your future!

**Massey Technical Institute**
**Dept. 7-AS-02, Jacksonville 6, Florida**
*ACCREDITED Member, National Home Study Council*

**MAIL COUPON TODAY** for FREE BOOK and MTI's unique SELECT-A-SKILL Opportunity Finder that can take the guesswork out of YOUR FUTURE!

Please rush to me, without obligation your FREE BOOK "Pick Your New World of Opportunity in Electronics" PLUS your SELECT-A-SKILL Opportunity Finder.

**MASSEY TECHNICAL INSTITUTE**
Dept. 7-AS-02, Jacksonville 6, Florida
Name ..............................
Address ..............................
City ................Zone ... State......

CIRCLE NO. 133 ON READER SERVICE PAGE

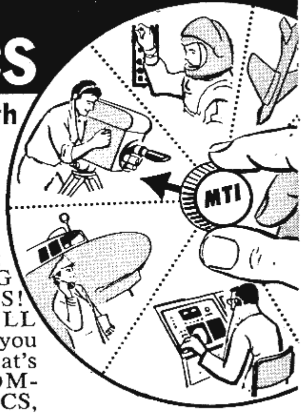

**INDUSTRIAL VS-2!!**

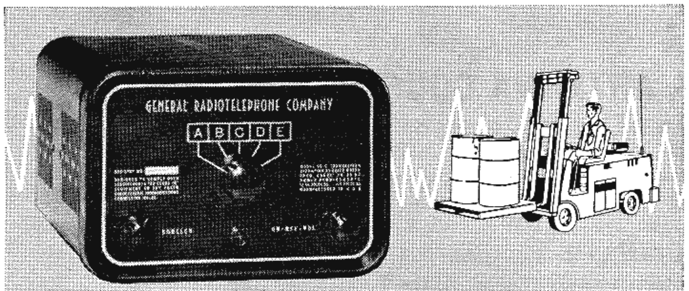

General's VS-2, because of its Vibration Rated Service, will meet every industrial, CB, and marine requirement and can be used with utmost confidence on boats, jeeps, tractors, fork lifts, or any type of equipment demanding rugged dependability.

FEATURES: 15 Watt Construction,* Transistorized power with automatic short circuit protection, Electronic switching - eliminates relay problems, Microphone with coil cord and moisture proof cartridge, 115V and 12V operation. Net price including microphone, crystals for one channel and 115V cord - only $139.95. 12V Cord - $2.95 (specify neg. or pos. ground).

* Under present rules part 19.32 the FCC does not provide for more than five (5) watt input in the Citizens Radio Service (26.965 - 27.255 MC Band).

10% DOWN!! EASY PAYMENTS!!
*See your local General Dealer today or write: Dept. 4,*

GENERAL RADIOTELEPHONE COMPANY
*3501 West Burbank Boulevard, Burbank, California*
*Phone: 849-6891, Area Code: 213*

CIRCLE NO. 121 ON READER SERVICE PAGE

## Digital Voltmeter

(*Continued from page* 56)

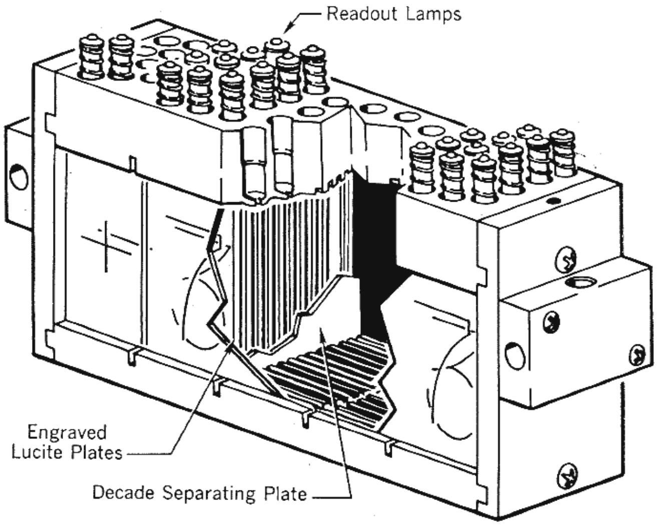

**Readout consists of four sets of Lucite plates with numerals and decimal points engraved. Each of the readout lamps is arranged to edge-light a single plate which illuminates the proper numeral. Two plates and lamps at left indicate "+" or "—."**

ing the error signal to disappear. With the other decades still at zero, the instrument now illuminates "+0.009" in the readout windows.

For a second example, assume +.099 volt is applied to the digital voltmeter. Again "up" pulses are generated to drive the first stepping switch. Observe that the switch will now step to the eleventh position, at which time the "up" pulses are transferred from the first stepping switch coil to the second stepping switch coil through the switch wiring (Fig. 11). The first switch is left in the nine position while the second one continues until a balance is reached at the tenth position, at which time the Kelvin-Varley divider arms reach a balance against the input signal. The readout now shows "+0.099." In a similar manner, increasing voltage inputs will cause the instrument to eventually reach the end of each stepping-switch position, and transfer to the next switch until a final reading of +9.999 volts is reached.

"Down" pulses are routed through other decks of the stepping switches in a somewhat different manner. Starting with the digital voltmeter at +9.999 volts, assume that the input voltage has dropped to zero. With the Kelvin-Varley divider at +9.999 volts and the input at zero, a square wave of proper polarity is generated which results in the "down"

**Fig. 11. All stepping switches are in their "0" position.**

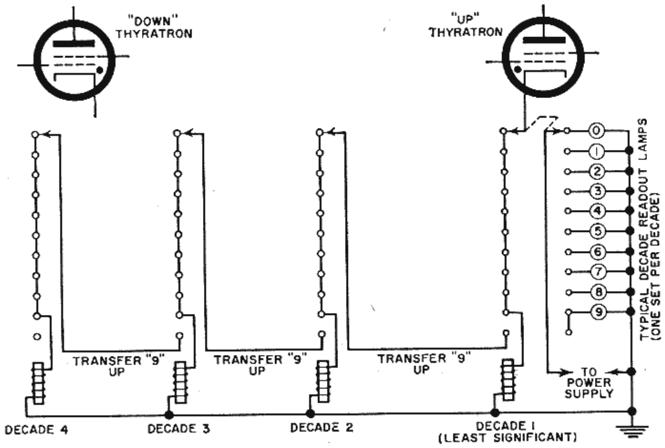

thyratron pulsing the fourth stepping switch coil (Fig. 12). A "down" pulse causes the switch to move one step, that is, to zero. Observe that the next "down" pulse is now transferred to the third switch coil which is at nine. One additional pulse results in the switch going to zero and again transferring the next pulse to the second coil. In this manner four "down" pulses can reset the readout to all zeros.

In situations where the stepping switches are at settings other than transfer 9's up, "down" pulses are routed through the least significant switch coil which is pulsed until a zero is reached. The "down" pulses, if continued, are transferred to the next most significant switch, which again repeats the sequence.

Under operating conditions such as proceeding from .009 volt to .010 volt, the stepping switches go from 0.009 volt to 0.019 volt, which causes the "up" pulses to change to "down" pulses. By following the foregoing sequence, it can be seen that the least significant digit will be actuated so as to produce the correct number. In this way, most inputs will cause a balance to be achieved by a combination of "up" and "down" pulses. See Fig. 13.

The stepping-switch techniques described here are commonly used in lower priced digital voltmeters. These may cost around $800 to $1000. Medium-priced machines may also use stepping switches but in oil-filled sealed metal containers. In the more expensive, higher speed digital voltmeters, other switching techniques are used. Banks of transistor-driven reed relays may be used for switching. Transistor-driven mercury-wetted contact relays are similarly used. More recently, transistor solid-state switches are being utilized in these instruments. All of these methods increase the complexity of the machine as compared to the much simpler, although slower operating, stepping-switch circuits that have been described in this article. ▲

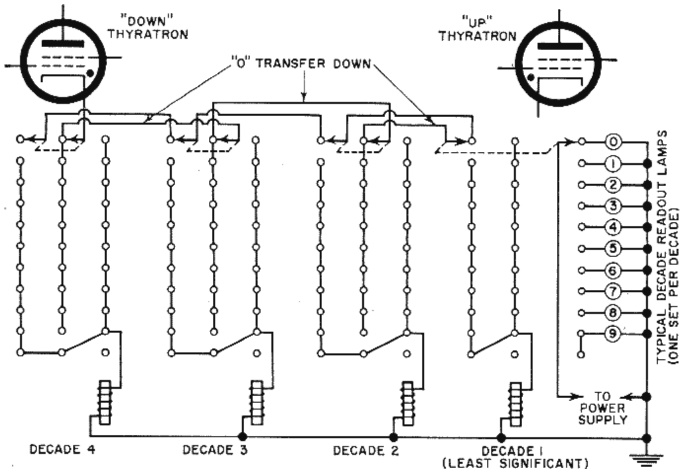

Fig. 12. Unit has been stepped down to "0000" in four pulses.

Fig. 13. Combinations of "up" and "down" pulses produce reading.