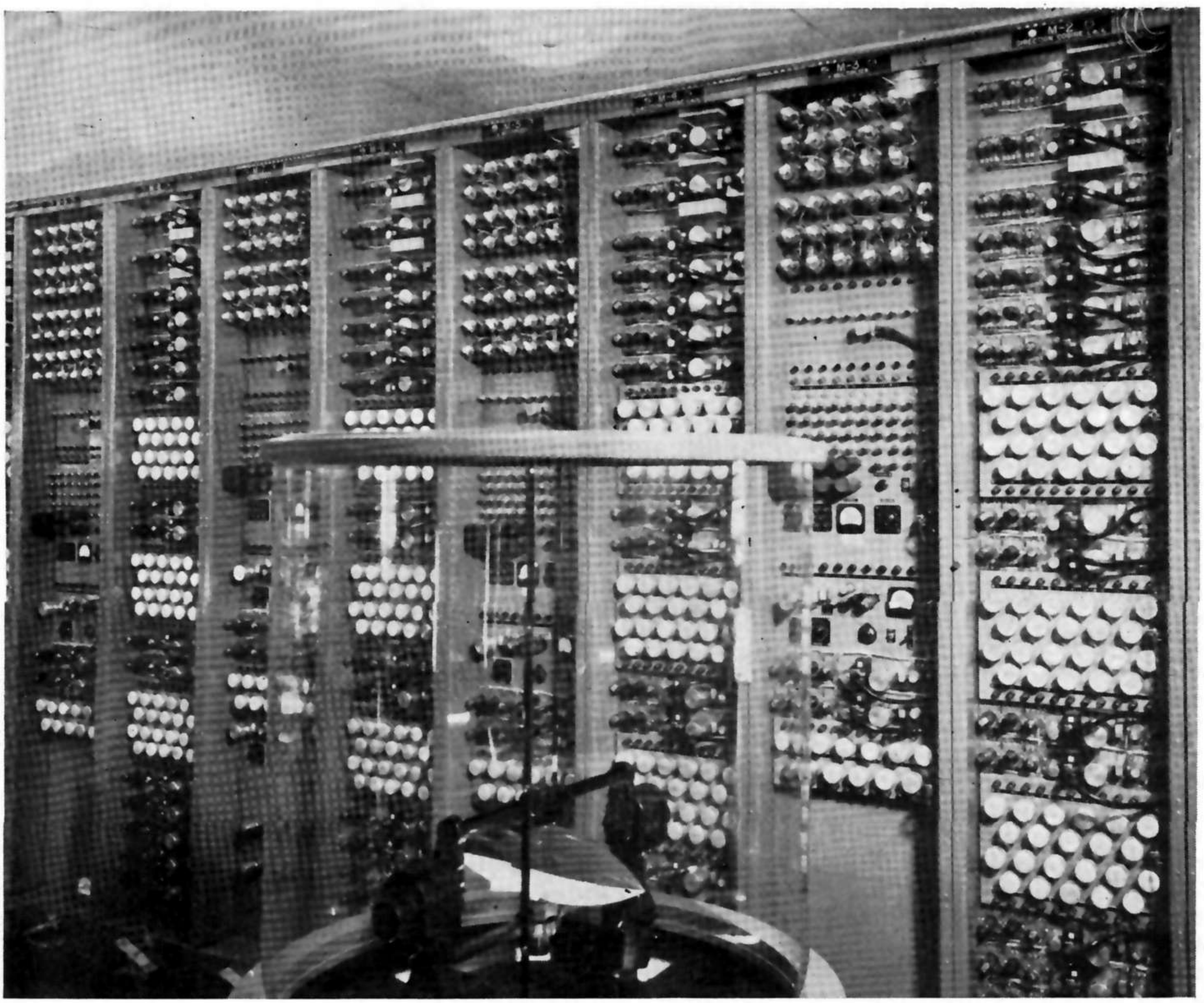

STEP MULTIPLIER RACKS (first, third, fifth and seventh racks from left) in missile simulator section of Project Typhoon computer. In foreground is servo-controlled missile model to show attitude of missile constantly during solution of target-interception problem

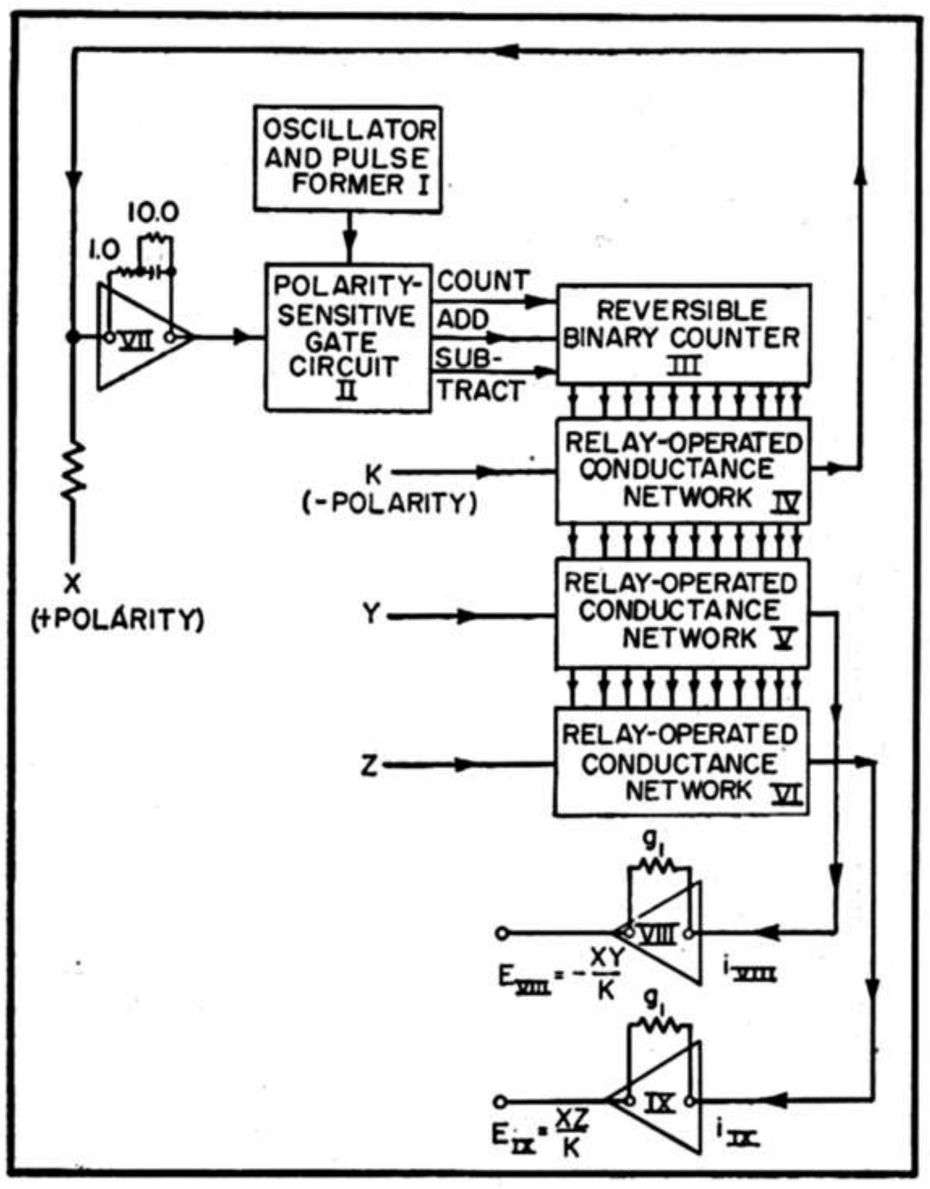

FIG. 1—Basic block diagram of step multiplier

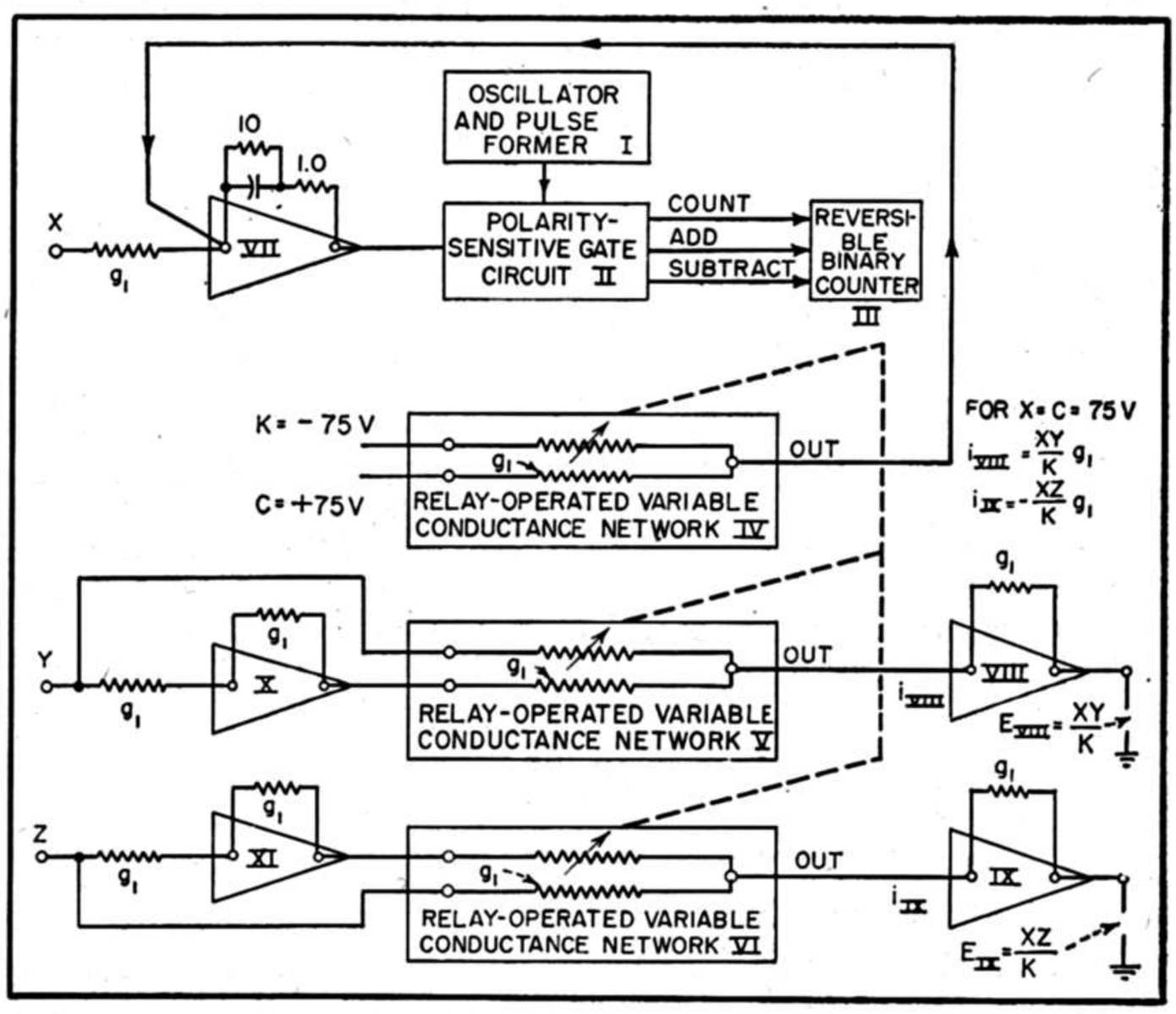

FIG. 2—Method of handling input voltages of both signs in multiplier

Step Multiplier in Guided Missile Computer

Need for test firings of new missile designs is minimized by simulating missile and target characteristics with new 4,000-tube analog computer. Required precision is obtained with reversible binary counter and relay-operated conductance networks in step multiplier

By EDWIN A. GOLDBERG
RCA Laboratories Division
Princeton, N. J.

PROJECT TYPHOON is a large-scale analog-type computer built specifically for the investigation of problems relative to the design of complete guided missile systems, under contract with the Office of Naval Research, Special Devices Center. The computer is divided into several sections, each of which handles some particular phase of a complete guided missile system problem. The major sections are (a) the missile simulator, (b) aerodynamic computer, (c) guidance computer, (d) target simulator computer, (e) recording and display devices and (f) power supply to operate complete simulator.

The input to the missile simulator computer consists of voltages representing aerodynamic forces along the three missile axes (roll, pitch and yaw), aerodynamic torques about the three missile axes, initial position of missile in earth axes, initial spin velocities about the three missile axes, initial linear velocities along the three missile axes, and initial attitude of missile axes relatives to earth axes expressed as direction cosines.

The output consists of missile position in earth coordinates, missile velocities in earth axes, missile linear velocities in missile axes, missile angular velocities (spins) about missile axes, and missile attitude in terms of direction cosines of missile axes relative to earth axes. Among the components required for this section are several high-speed multipliers of high precision. High-precision multipliers were required particularly for maintaining orthogonality of the earth and missile axes systems as the computation proceeds. The step multiplier as described in this article was developed for this application. Thirty-six multiplications and eighteen integrations are made in this section.

The guidance computer is a flexible arrangement of components interconnected by means of patch cords in a manner dependent on the nature of the guidance system. It receives information from the target simulator and missile simulator and delivers its output to the aerodynamic computer.

The aerodynamic computer receives missile velocity, altitude and attitude information from the missile simulator, and missile fin deflection information from the guidance computer. It computes the aerodynamic forces and torques, and routes this information to the missile simulator section. Thus, a closed-loop computing system is formed.

Target trajectory is generated as target position in earth coordinates by the target simulator. Target maneuvers are made by operation of target speed, climb and turn controls.

The recording and display devices consist of two Electronic Associates Variplotters which are normally used for missile and target trajectory plotting in both the horizontal and vertical planes, eighteen GE photoelectric recorders which may be used to record any eighteen variables desired, a missile model which assumes the attitude and fin deflections of the missile being simulated, and a three-dimensional trajectory model which moves objects representing the missile and target in three dimensions.

An idea of the size of the computer may be gained from the following tabulation of certain components:

Section	Stabilized D-C Amplifiers	Computing Servo Units
Aerodynamics.....	135	6
Guidance.....	148	11
Missile Simulator..	135	
Target Simulator..	9	2
Recording.....	18	
TOTAL.....	445	19

There are a large number of various other types of components which have not been tabulated. For example, a large bank of polystyrene capacitors in the guidance computer makes possible 80 simultaneous integrations in this section. The computing equipment is mounted in 43 special racks, each rack being 9 feet high. Forty of the racks are standard width, and three are double standard width. About 4,000 vacuum tubes are employed, and the total power consumption is 46 kilowatts.

Step Multiplier Design

Project Typhoon requires a multiplier of very high precision and moderate speed of response, for application in certain critical parts. Servo-type multipliers to meet both requirements seemed to be beyond the realm of practicability, and no all-electronic multiplier investigated had sufficiently high accu-

racy. As a consequence, the step multiplier was developed.

In principle, the step multiplier and servo multiplier are similar. Figure 1 is a basic block diagram of the step multiplier. The count stored in the reversible binary counter is made proportional to the input variable X. The conductances of the relay-operated conductance networks are each made proportional to the count stored in the reversible binary counter, and hence are proportional also to the variable X. Thus, if a voltage Y is applied to the input of one of the conductance networks (V), the output current will be XY and will appear as a voltage proportional to XY at the output terminals of amplifier VIII.

The reversible binary counter either counts at a rate determined by the frequency of the oscillator, or the number in the register remains stationary, depending upon the value of the input voltage to the polarity-sensitive gate circuits. If this input voltage exceeds a certain positive value, the counter will subtract one unit for every pulse from the pulse former. If this input voltage exceeds a certain negative value, the counter will add one unit for every pulse from the pulse former. Should this voltage be zero, or any value between the minimum add or subtract voltages, the count will remain stationary.

If the current fed back to the summing point of amplifier VII from conductance network IV is of the same magnitude but of opposite polarity relative to the current fed to the same point by the variable X, the output of VII will be zero and the count will remain stationary. Should this not be the case, the counter will count in the proper direction and change the conductance of IV until the aforementioned condition prevails. Thus, if G is the conductance of each conductance network, K is the input voltage to conductance network IV and X is the input voltage to summing conductance g_1,

$$G = X_{g1}/K \qquad (1)$$

The input currents to amplifiers VIII and IX will then be

$$i_{VIII} = XY_{g1}/K$$
$$i_{IX} = XZ_{g1}/K$$

The output voltages of amplifiers VIII and IX will be

$$E_{VIII} = -XY/K \qquad (2)$$
$$E_{IX} = -XZ/K \qquad (3)$$

since the feedback conductance of each amplifier is g_1.

Negative values for G are not obtainable since the conductance networks are composed of passive elements only. Hence, some scheme must be provided so that negative and positive values for X may be handled. This may be accomplished by effectively adding a fixed voltage C to X of greater magnitude than X will ever be, and subtracting a voltage CY/K from the output of the multiplier. This is illustrated in block diagram form in Fig. 2 for two different output arrangements. One output, E_{VIII}, will be $-XY/K$, while the other output, E_{IX}, will be $+XZ/K$. It is convenient to choose $C = +75$ volts, $K = -75$ volts, and a value of G for the conductance networks equal to g_1 when the count in the counter is half of the full-scale value. The multiplier thus arranged is capable of accepting values for X which vary between +75 volts and −75 volts.

Reversible Binary Counter

Figure 3 is a block diagram of the reversible binary counter. Positive pulses are continuously fed into pulse input terminal B. The count of the counter will remain stationary when the value of the error input voltage at terminal A is zero. If the error input voltage increases in a positive direction, the voltage on the subtract bus will rise to zero and will be prevented from going positive by the diode limiter. This places the subtract gates in the active state so that they can transmit pulses. The add gates will be in the inactive state because the potential of the add bus will be negative. Further increasing the error input voltage will energize the pulse gate so that pulses present at terminal B will be transmitted to the counter, and one unit will be subtracted from the count of the counter for each pulse appearing at B.

For negative error input signals, the potential of the add bus will become zero, and the add gates will be made active. The subtract bus will be negative and the subtract gates will be inactive. Further excursion of the error input signal in the negative direction will activate the pulse gate, and will cause one unit to be added to the count for each pulse appearing at input B.

Thus, the counter will either add

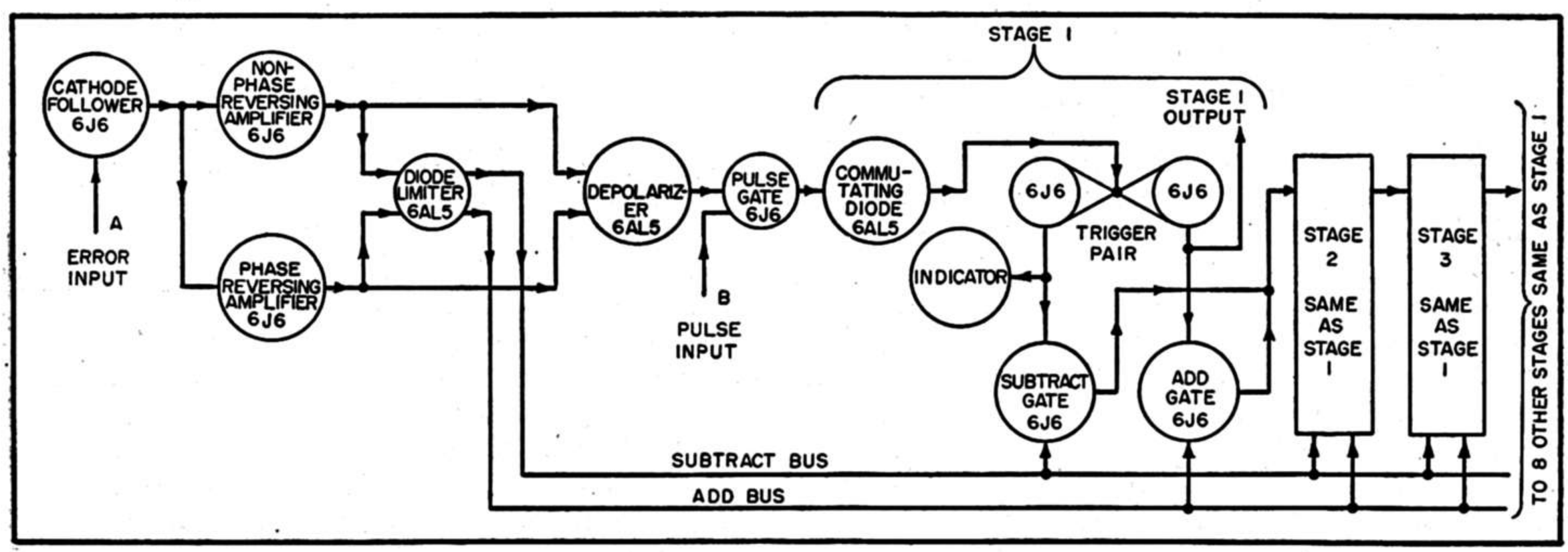

FIG. 3—Block diagram of eleven-stage reversible binary counter

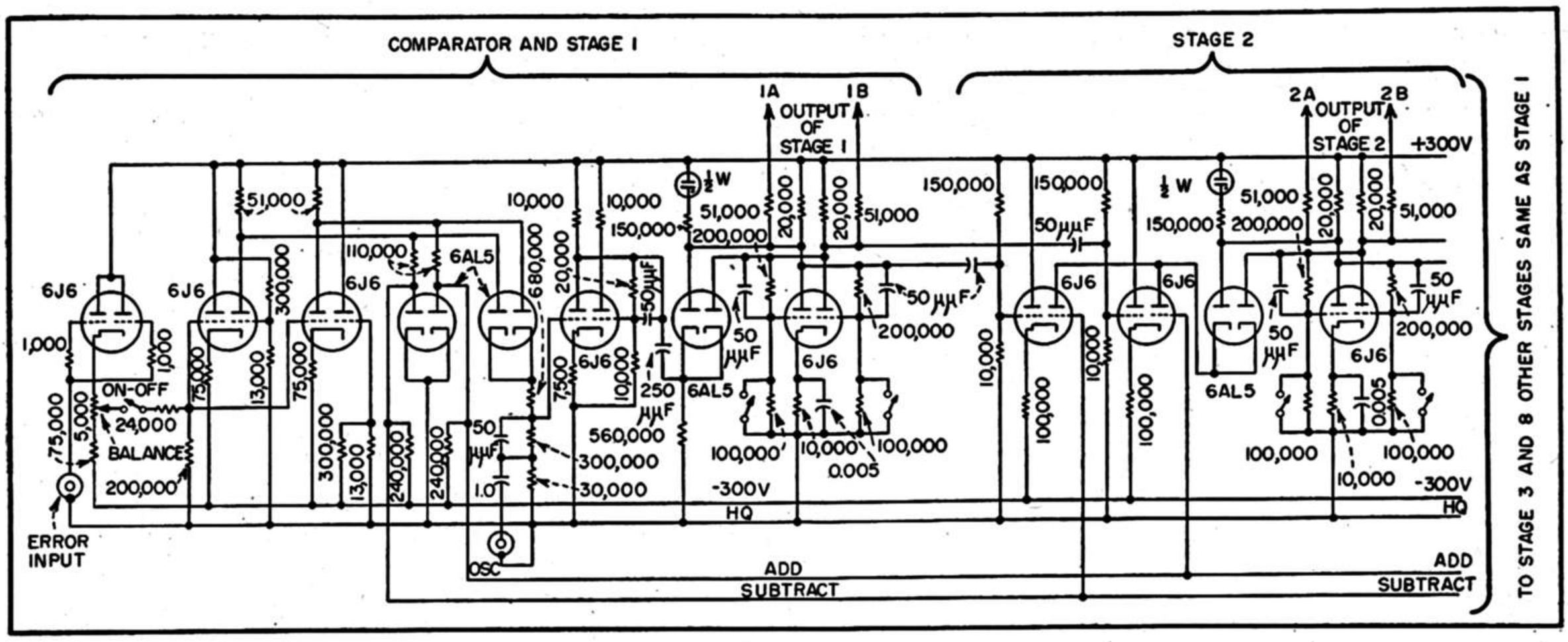

FIG. 4—Circuit used in first two stages of reversible binary counter

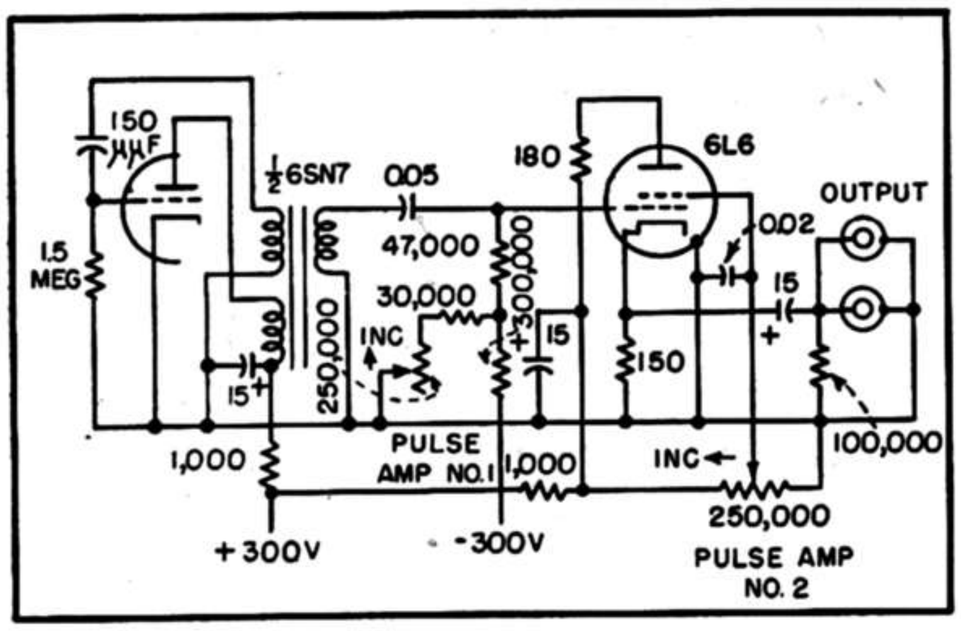

FIG. 5—Blocking oscillator used to generate pulses

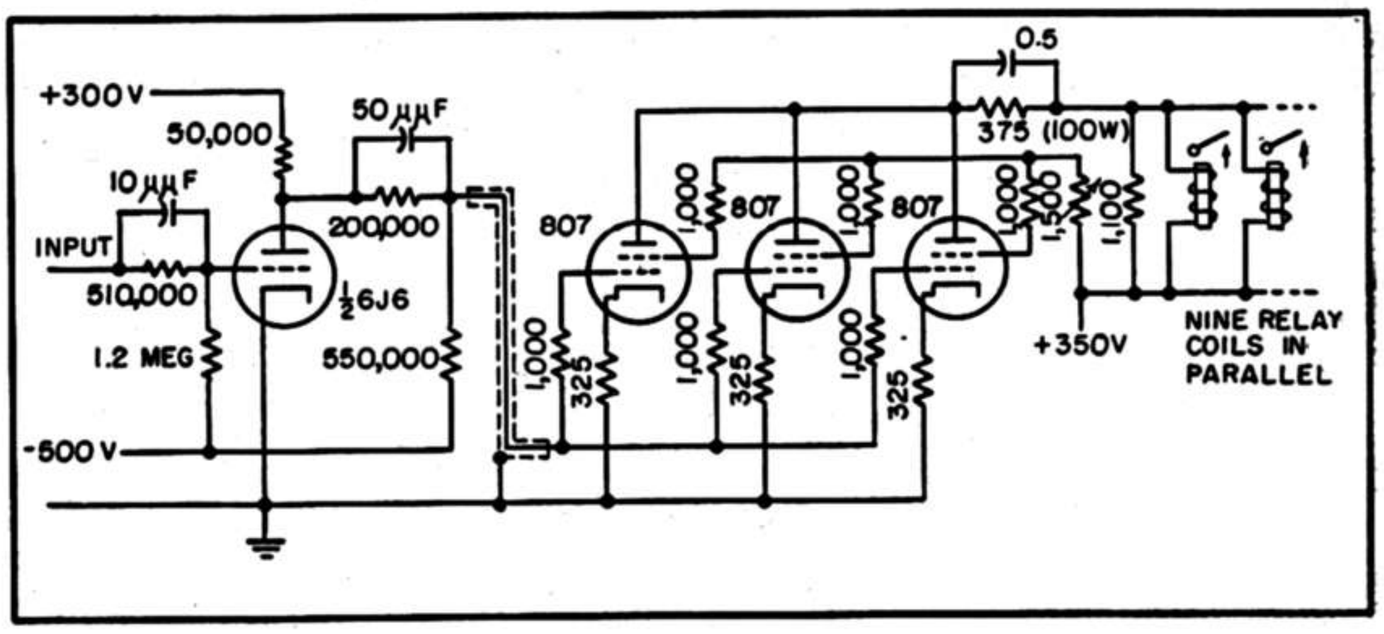

FIG. 6—Relay drive amplifier used to actuate relays of variable-conductance network

or subtract one unit from the count for each pulse at input *B*, dependent on the polarity of the error signal at input *A*. The particular mode of operation is obtained by proper choice of the carry-over connections by means of the add or subtract gates.

Figure 4 is the schematic diagram of the first two stages of the counter. The other 9 stages are similar. Diode commutating tubes are used as coupling elements to insure positive counting. The output of each trigger pair is differentiated at the input grid of each gate tube so that the gate tubes transmit pulses. Only negative input pulses will change the state of a trigger pair; positive pulses have no effect.

Each trigger pair has associated with it a neon light to indicate its state. Two pushbuttons per trigger pair are available for setting the state of each stage of the counter, or in other words, the count when the error input voltage is either zero or is disconnected. The output of each stage drives an amplifier which in turn controls the relays of the conductance networks associated with that stage. Pulses for operating the counter are obtained from the blocking oscillator circuit of Fig. 5.

High-Speed Relays

The rate at which the multiplier (X) may be varied and still have the values of the conductances in the variable-conductance networks accurately follow is a function of the speed at which the associated relays can operate. Since high-speed operation was desired, the use of high-speed relays was necessary. It was not possible to find a suitable commercially available relay so one was specifically designed for the job. It is characterized by an extremely light armature which is carefully damped by proper use of tungsten-loaded rubber dampers. The relay exhibits no chatter, and will either close or open within 100 microseconds after application of control voltage to the coil.

Relay Drive Amplifiers

The time required for a relay to close or open is a function of the rate of rise or fall of the coil current, among other things. Consequently, a relay drive amplifier circuit was designed to cause the coil current to rise or fall as rapidly as practicable without damaging the coil insulation. The rate of rise of current through a coil, with resistance and capacitance disregarded, is given by

$$dI/dt = E/L \qquad (4)$$

where dI/dt is the rate of change of current in the coil, E is the voltage across the coil and L is the inductance of the coil in henrys.

To obtain rapid rise of current, E must be large. However, the maximum current must be limited to a safe value, otherwise the coil would burn up. The high-speed relays used were designed for a

steady-state coil current of 50 ma.

A constant-current type of drive amplifier is used. Since the tube drop would normally be high for tubes driving closed relays, the tube dissipation would be high, necessitating the use of fairly large tubes. To reduce tube dissipation, a resistor bypassed with a capacitor is inserted in series with the plates of each parallel group of tubes. Approximately full plate supply voltage is impressed across the relay at the instant the drive tubes are made conducting. As the current builds up in the relay coils, the voltage drop across the relay coils decreases and the voltage drop across the tubes increases. The capacitor across the series resistor will charge up rather slowly, and thus this network will have negligible effect upon the rate of buildup of relay current. In the steady-state conducting condition, there will be very little voltage drop across the relay coils, little across the tubes, and considerable voltage across the resistor-capacitor network.

When cutting off the tubes, the voltage developed across the relay coils will be a function of the coil current, the capacitance across the coils, the inductance, and the resistance across the coils. Neglecting the capacitance, the peak voltage will be $E_c = I_c R_s$, where E_c is peak voltage developed across the coils, I_c is coil current at the instant that current is cut off, and R_s is resistance shunted across the coils. To prevent E_c from exceeding a safe value, R_s must be chosen accordingly. If R_s is made too small, the time for opening will be excessive.

Typhoon incorporates multipliers with either four, six, nine or eleven relay coils per drive amplifier. The relay drive amplifier in Fig. 6 is designed to drive nine relay coils in parallel.

Variable-Conductance Networks

Each variable-conductance network consists of eleven T networks whose inputs and outputs are paralleled, and one non-switched conductance. The transfer conductance of each T network may be made zero (relay closed) or a predetermined value (relay open). Transfer conductance values for the various different networks in a set are chosen on a scale of two basis.

The signal amplifiers used in conjunction with the step multiplier are all similar, and are of the wide-band chopper-stabilized type[1] shown in Fig. 7. Their use eliminates the necessity for manual adjustment of d-c zero offset, and they do not drift.

Interpolation Effect

Should the value of the variable X be such that the conductance networks cannot accurately match this condition because their conductance values vary by discrete steps corresponding to 1 part in 1,024, the conductance value will oscillate between the two adjacent values which straddle the value called for by X.

A partial integrating circuit is used in the feedback network of the error-sensing amplifier (amplifier VII in Fig. 2). The gain of this amplifier for d-c is 11 times the gain for frequencies above a few cycles. The incorporation of some integration in this network is necessary for stable operation of the feedback loop when the loop gain is high.

Performance

The step multiplier is very similar in principle to the servo type of multiplier which incorporates a gang of similar linear potentiometers. Multipliers which tracked very well were needed in the missile simulator section. The step multiplier meets this requirement very well since each conductance network may be adjusted to the calculated value within ±0.001 percent of full-scale conductance. It was not possible to obtain potentiometers which would track as well.

The speed at which X may be varied yet have the counter track is a function of the oscillator frequency which drives the counter, and also a function of the relay speed.

Since the relays require about 100 microseconds to close or open, they are the limiting factor in speed of operation. An oscillator frequency of about 1,000-cps is used, and consequently about one second is required to change the value of the multiplier (X) from zero to full scale. The rate at which the multiplicands (Y and Z) may be changed is a function of the band width of the conductance networks and associated amplifiers.

The author wishes to acknowledge the contributions to the project of A. W. Vance, who conceived the basic principle of the step multiplier, and R. F. Brady and F. F. Shoup, who jointly contributed to the development of high-speed relays employed.

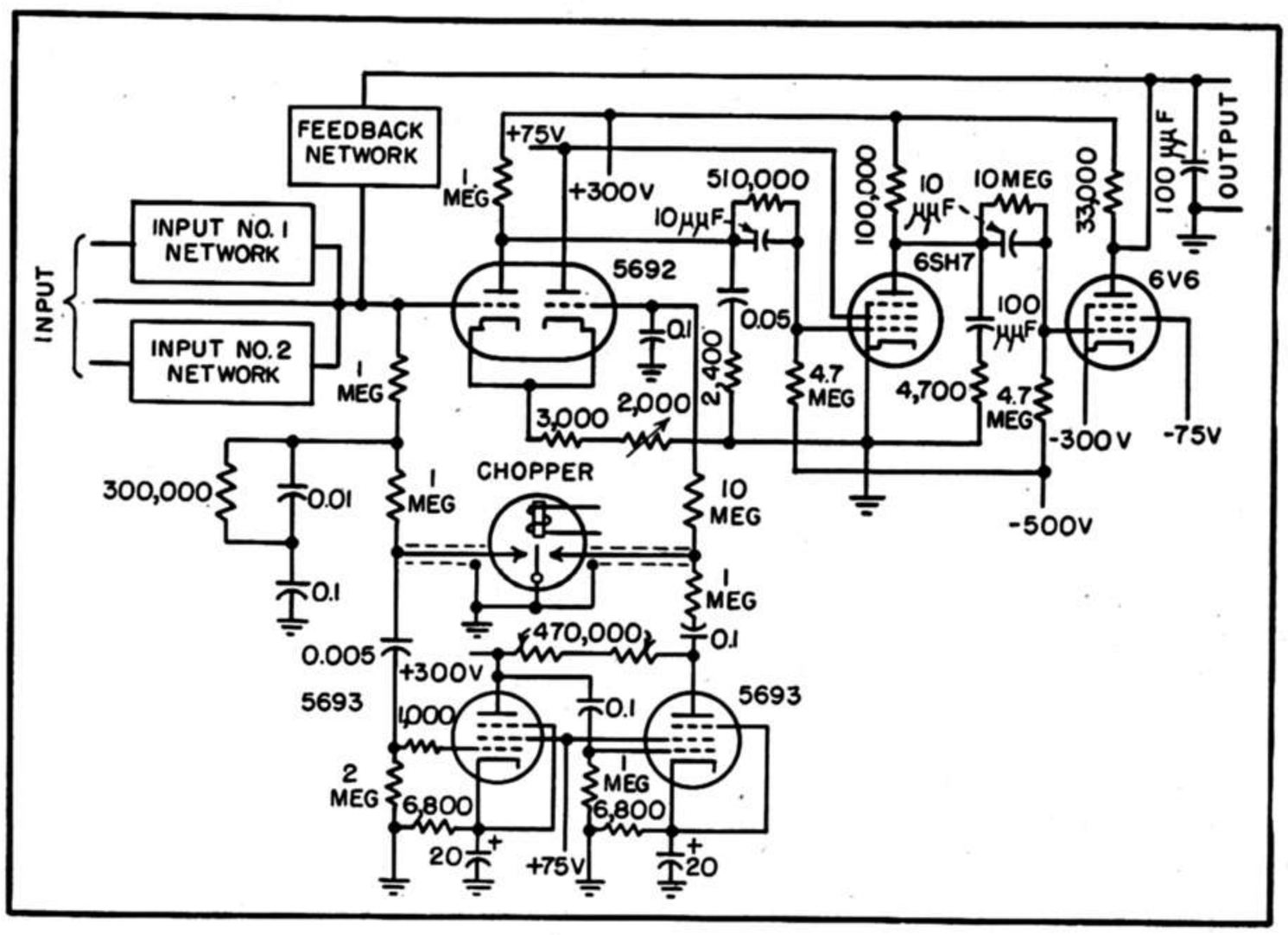

FIG. 7—Circuit of stabilized d-c amplifier used with step multiplier

REFERENCE

(1) Edwin A. Goldberg, Stabilization of Wide-Band Direct-Current Amplifiers for Zero and Gain, *RCA Review*, p 296, June 1950.