George A. Philbrick and Polyphemus—The First Electronic Training Simulator

PER A. HOLST

In 1937–1938 George A. Philbrick developed what he called an "Automatic Control Analyzer." The analyzer was an electronic analog computer, hard-wired to carry out a computation, or simulation, of a typical process-control loop. The analyzer consisted of several vacuum-tube amplifier stages interconnected to simulate a three-term PID controller operating on a four-lag process, with a number of switches and potentiometers provided for easy variations in the circuit configurations and parameter values. The whole assembly was battery operated and mounted in a standard rack. It contained a built-in oscilloscope: a Dumont 5-inch oscillograph, Type 208, which was one of the early CRT devices on the industrial market. Philbrick named the single-screen analog computer "Polyphemus," after the one-eyed Cyclops who, according to Greek mythology, was blinded by Odysseus.

*Categories and Subject Descriptors: A.0 [**General**]—biographies, George A. Philbrick; K.2 [**History of Computing**]—hardware, Polyphemus*
General Terms: Design, Experimentation
Additional Key Words and Phrases: analog computing device, computer simulation

Introduction

Electronic analog computers and simulators and their applications have grown and expanded quickly, attaining age, maturity, and technical sophistication during the past 30 years. Simulation has rapidly become an "in thing" for every subject from horseshoe manufacturing to cell biodynamics and world ecology. Perhaps not too many people realize—or remember—how and when it all came about.

In his book, *Simulation—The Modeling of Ideas and Systems with Computers*, John McLeod (1968) gives credit to Ragazzini, Randall, and Russel for work they started in 1943 on one of the first electronic analog computers. An earlier pioneering effort was carried out, however, at the Foxboro Company in Foxboro, Mass.

In January 1938 George A. Philbrick wrote a proposal to his supervisors at Foxboro entitled "Study of Controlled Systems." It resulted in the construction of an electronic analog computer, or simulator, believed to be the first of its type in the world. In his proposal, Philbrick stated,

> We attempt to describe a method for the rapid and easy solution of problems which arise in connection with the technical study of process control. Also included is an electrically operated unit capable of disclosing the behavior of controlled systems as influenced by their various physical characteristics. The phrase "controlled system" is meant here to include both process and controller. Further, we do not restrict the term "controller" to merely those types of controllers already in existence. (Philbrick 1938)

What Philbrick had then envisioned was what we now term *computer simulation*—the use of electronic computer circuits to study physical and mathematical relationships and to do so in ergonometrically opti-

---

Author's Address: The Foxboro Company, Foxboro, MA 02035.

© 1982 AFIPS 0164-1239/82/020143-156$01.00/00

mum ways. His "automatic analyzer" was nothing less than a high-speed (even in today's scale), repetitive (for CRT-display refreshment), dynamic, interactive electronic simulator that was programmable and adaptable to many technical applications. Philbrick was a truly innovative and goal-oriented research engineer who went on to become a successful business entrepreneur with his own company, George A. Philbrick Researches, Inc. In 1966 his company merged with Teledyne to become Teledyne-Philbrick, Inc. Philbrick left his stamp on many research projects at Foxboro and is still remembered by old-timers as a unique, creative personality. He passed away at his retirement home on Cape Cod in 1974.

Background

At the time of Philbrick's proposal, dictionaries reserved the use of the word *model* for small replicas (such as toy models) and to describe those persons who posed for artists and photographers, or who displayed haute couture garments to society women. Similarly, the word *simulate* conveyed only nontechnical meanings, such as to feign, counterfeit, or be false. Both terms today possess well-established technical definitions and are in wide use.

A model categorizes a problem, relating its symptoms to causes, suggesting problem-solving approaches, and putting the system into the appropriate perspectives of environment and functional history. As such, a model is often incomplete, existing in its owner's head as an intuitive, often implicit extension of the owner's experience and insight, and relying on the assumption that the present situation is not dissimilar from others previously encountered.

To simulate is to duplicate the essence of such a model using physical means. Simulation may be said to be the use of a model to represent over time the essential characteristics of a system or process under study, and to expose important system relationships, both internal and external, without actually attaining reality itself.

Philbrick's analyzer represents such a physical means for the study of process-control problems. The models were typical (for the time) closed-loop control applications, and the studies were designed to determine controller parameters, control goodness, loop stability, frequency bandwidth, nonlinearity influences, and a number of other issues of interest to the process-control engineer. As such, the models were dynamic, lumped-parameter, linearized, and simplified, with just a few time constants. They represented flow, pressure, and thermal processes constrained by tanks, pipes, heaters, pumps, and control valves. The analyzer included a three-term controller model with adjustable controller actions (proportional, integral, and derivative—PID), and was furnished with a few bells and whistles for operational displays and dynamic effects.

The distinction between a simulator and an analog computer should be drawn here. A simulator is a fixed (to a large degree) structure embodying one unique model. Examples include nuclear-reactor and flight-training simulators. A simulator's purpose is specific: to provide the accurate realization of its model for various parameters, stimuli, and operator interactions of interest to its users.

An analog computer, on the other hand, is a general-purpose assemblage of computing elements, each of a specific type and intended to perform a mathematically defined function. By programming (interconnecting, scaling, and initializing) such computing units in a purposeful way, the analog computer will take on the representation of any appropriately quantized model that can be fitted within its spectrum of capabilities.

Against this background, the Philbrick analyzer must be categorized as a simulator containing a relatively fixed model structure but with many options for adjustments and variations. Even though it contained several operational amplifier stages, each one per se mathematically defined and individually controllable, the primary purpose of the analyzer was to provide a control-loop configuration model and to permit studies of such control-loop situations.

In his electronic designs, however, Philbrick clearly recognized the unique characteristics of an operational amplifier as the building block for electronic analog computer circuits. In his 1938 designs he implemented the concept that later was to become a main product of his company, the one-vacuum-tube operational amplifier. To him, though, the synergistic integration of the computing units into one analyzer was more important than the creation of a general-purpose computer based on an array of operational amplifiers and input-feedback networks. Therefore, the honor of in-

---

Per A. Holst has been with the Foxboro Company since 1966. He is now manager of information-based engineering and automation, seeking opportunities to use computers more effectively in engineering. He was born in Norway and was affiliated with the Chr. Michelsen Institute in Bergen, where he first became interested in simulation. He has served as president of the Society for Computer Simulation and at present is a member of the AFIPS Board of Directors.

venting the general-purpose electronic analog computer must go to someone else.[1]

Purpose

In his proposal, Philbrick set forth a clear purpose for his design.

> From the point of view of the mathematical embodiment of the general problem, any system which is completely governed by the equations which constitute the problem is as exact a model as the one for which the equations were written. Let us suppose that we could have such a model, obeying exactly our equations but having no other necessary physical resemblance to systems which our analysis is intended to represent. What requirements could be placed upon it? It should first be thoroughly flexible so that it could represent any system in which we might be interested. If its representation were to include controllers, the variables of the controller should be adjustable at will. In the mathematical method, the final result often takes the form of a graphical picture of a function of time; our model should likewise be capable of reproducing its behavior in some perceptible form. The time required to manipulate the adjustments of the whole unit preparatory to allowing it to simulate a given system, as well as the time elapsing before the results become perceptible, should be quite short. The overall accuracy should be within the limits of observation, while the inherent consistency of operation should be unimpeachable.
>
> A unit which would satisfy the requirements of the last paragraph could be said to have several uses. Perhaps the most immediate and important of these would be the saving in time and energy in the solution of problems of the type now submitted to mathematical analysis. This service alone should be sufficient reason for its existence and should permit it to be called an automatic "analyzer." (Philbrick 1938)

The special nature of Philbrick's requirements illustrates his view of the need for repetitive operation, suggesting electronics as the implementation medium. On this basis, the process complexities to be represented demanded the use of high-speed electronic representations, at least in part. The parallelism between electric capacity and resistance on the one hand, and hydraulic capacity and resistance on the other, is quite practical; the part of the analyzer that was to represent the process equation could be easily imagined. Philbrick showed that the development of electrical circuits to represent the whole range of generalized instrument equations was just as possible. For example, the difficulties involved in the exact representation of idiosyncrasies of controlled systems such as valve nonlinearity were more serious but surmountable.

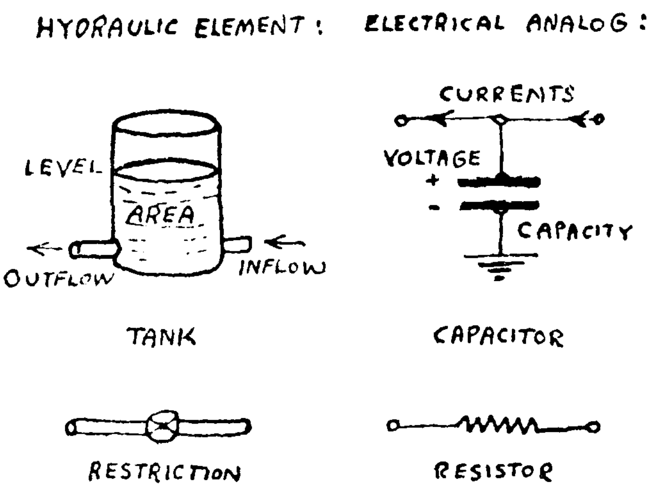

Figure 1. The analogy between a water tank and an electrical capacitor that forms the basis for a dynamic-process simulator (Philbrick 1938).

Common practice, then and now, calls for the results of specific controlled-process problems to be plotted against time. If such a problem were set up on Philbrick's analyzer, the compressed time span involved in the result could easily be fitted within 0.01 second. Thus if the resultant display of the variable in the solution were automatically caused to repeat itself (after a retrace-reset interval), the analyzer could present a complete solution 100 times every second. Philbrick knew that if any such variable in which he was interested was generated in the form of an electrical potential and applied to the vertical deflection plates of a cathode-ray oscilloscope (with a horizontal sweep frequency in synchronism with the frequency of the repetition), the plot of the variable against time would be seen as a static curve on the oscilloscope screen. Then any manual changes made on the analyzer, corresponding to alterations in the constants of the equations describing the process and controller, would have an immediately observable effect on the visible solution.

Analyzer Components

As an example, look at a water-tank system that Philbrick describes.

> Any water-tank system interconnected by linear or "viscous flow" restrictions or resistances is identical in behavior to an electrical resistance-capacity network in which all the resistances have one terminal in common.

---

[1] Vannevar Bush, of MIT, is generally recognized as the inventor of the mechanical differential analyzer, the first working mechanical general-purpose analog computer, in the 1920s.

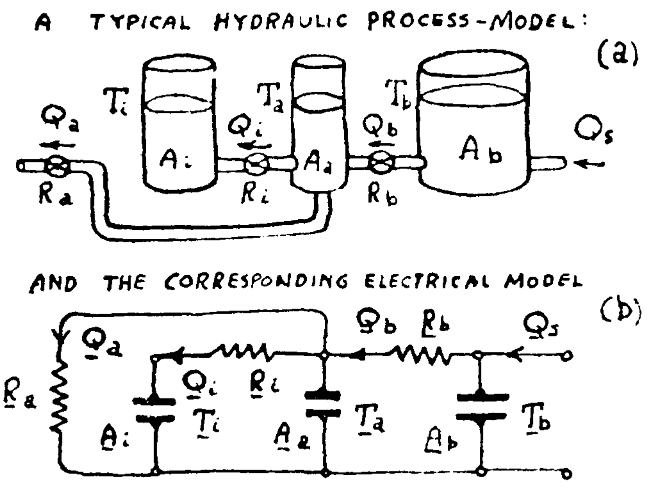

Figure 2. A more complex hydraulic-process model and its corresponding electrical analog representation (Philbrick 1938).

> The analogy between the hydraulic and electrical elements is indicated in Figure 1. The tank area is analogous to the capacity of the condenser; the water level is analogous to the voltage across the condenser; the flow of water to the electrical current. Hydraulic and electrical resistances are mutually analogous. In Figure 2 is shown a typical tank system and its electrical analog. (Philbrick 1938)

Philbrick found it sufficient to state that the two systems are completely analogous under the indicated correspondences. The process pictured in Figure 2 is only one of a wide variety of processes that might equally well have been chosen to illustrate this point.

In the process represented in Figure 2, for example, it is clear that he might consider any one of the levels (or voltages) as the controlled variable. If one were chosen, say T_a, then the instrument should measure that variable. The measurement might be accomplished directly or indirectly; thus an instrument, in an attempt to measure and control T_a, might actually measure T_i.

The instrument component of the analyzer was the circuit Philbrick interposed between the measurement of the controlled variable (the function of the sensing element) and the means of operating on the controlling medium (in a compressed-air–operated controller, the bonnet pressure). The form of the controller component depended on the type of controller with which the analysis was concerned. Thus for a proportional (in Philbrick's terminology, throttle-range) controller, the instrument component would be a circuit that would make the flow (or output current) proportional to the controlled variable with definite limits on the controlled variable, and would hold the output at specified maximum and minimum values when the controlled variable went beyond those limits. Philbrick accomplished this, as indicated in Figure 3.

In Figure 3 the process component might have been as shown in Figure 2(b) where, for example, the voltage T_a was a controlled variable. The set point (the control point) was then introduced in the form of an adjustable voltage; the circuit would allow the difference between the controlled variable and its desired value to pass on to the amplifier. The amount of gain or amplification obtained in the amplifiers could be adjusted according to the throttle range desired. To obtain the typical discontinuity that is encountered when the valve bonnet pressure of an air-operated control valve reaches its maximum or minimum value, Philbrick made the amplified voltage go through a throttle-range simulator before being applied to modulate the current controller. This throttle-range simulator has the characteristics shown in Figure 4.

The representation of more complicated controllers was accomplished by the addition of elements to the basic system shown in Figure 3. For example, for the simulation of a Stabilog (Foxboro trademark) controller, a unit was provided that added to the bonnet-pressure voltage a factor proportional to the integral of the controlled-voltage deviation. Philbrick achieved this with a unit directly analogous to an air Stabilog controller or by a method that was probably more feasible for the rapidity of operation required. This involved allowing the bonnet-pressure voltage to cause a current to flow through a resistance into a capacitance and adding the voltage across the capacitance (after appropriate attenuation) to the controlled-voltage deviation. Such a unit obeys laws that, for practical purposes, are identical to those governing the actual Stabilog controller. The value of the resistance re-

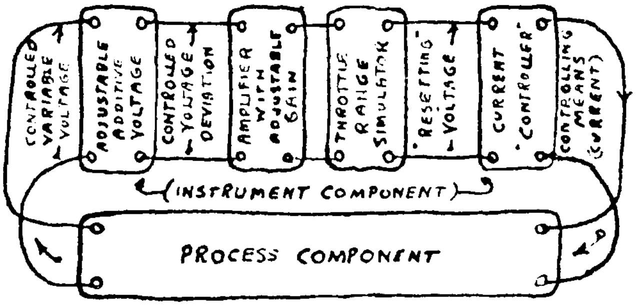

Figure 3. Block diagram of simulator showing (*top*) the instrument component, and (*bottom*) the process component making up a complete control loop (Philbrick 1938).

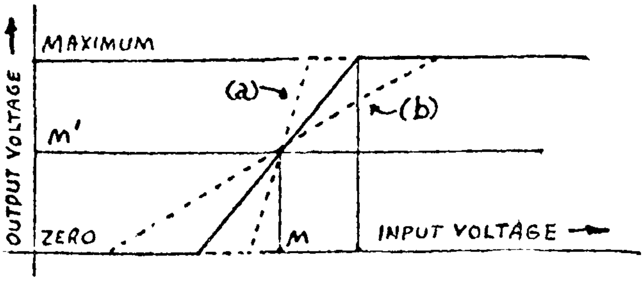

Figure 4. The limits imposed on the output voltage represent the nonlinear characteristic of the proportional (throttle-range) controller (Philbrick 1938).

quired would depend entirely on the "rate of reset" to be employed and could easily be adjusted over a wide range. Similar modifications allowed Philbrick to simulate many other controllers, such as the various types of floating controllers and Foxboro Model 30s. Process behaviors like the then often-observed loss of control under changes in the load were immediately observable when the suspect controllers were demonstrated with the analyzer.

Introducing Step-Response Upsets

In the circuit indicated in Figure 5, Philbrick defined the required process upsets. These could be actuated on the same periodic basis as the retrace-reset of the horizontal-time axis-plate circuit of the oscilloscope, achieving the necessary synchronization to make the graphic result on the screen appear stationary. Philbrick clearly saw that if the process upset (or load disturbance) had the form of a sudden steplike change of some magnitude in the system, it would be possible to reverse the change at the end of that interval and find that at the end of this second equal interval, the system would be in precisely the same state as before the original upset. Thus through this return to the original conditions, it would be feasible to repeat the preceding sequence indefinitely. The time of the repetition, or twice the individual upset-interval length, Philbrick termed the *repetitive period.* This concept became the basis for the compressed time-scale, repetitive-operation, high-speed analog computers that became synonymous with Philbrick's computers.

The disturbance or upset applied could have any periodic form. It is likely, however, that the types of upset most useful for the analyzer were the reversed sudden changes of the sort mentioned. An often-found disturbance takes the form of a sudden change in control point. This is commonly encountered in practice and is said to be probably the worst type of upset a controlled system can undergo. In Figure 6(a) Philbrick shows a method whereby such a control point of an instrument could be studied. An adjustable voltage, called the index voltage, is shown opposed to the controlled voltage in such a way that when the controlled voltage is equal in absolute value to the index voltage, the voltage passed on to the instrument component is zero.

To this index voltage the upset circuit successively adds and subtracts a voltage of a magnitude proportional to the desired degree of upset. Philbrick's circuit for the provision of an adjustable upset of this sort is shown in Figure 6(b). The contacting points are actuated periodically so that they are open and closed for equal intervals (the half-period). The circuit is arranged so that when the degree of upset is adjusted to zero, the control point of the index voltage itself is, in effect, zero; when the degree of upset is at any other value, the control point is changed by equal amounts above and below that dictated by the index voltage. Because of the small current required by the grid circuit of the first tube in the amplifier on which these voltages are impressed, the inconstancy of the amount of resistance in the circuit was found to be of little consequence.

Another form of disturbance would occur with a sudden change in load. In his water-tank example, Philbrick showed that such an upset could be charac-

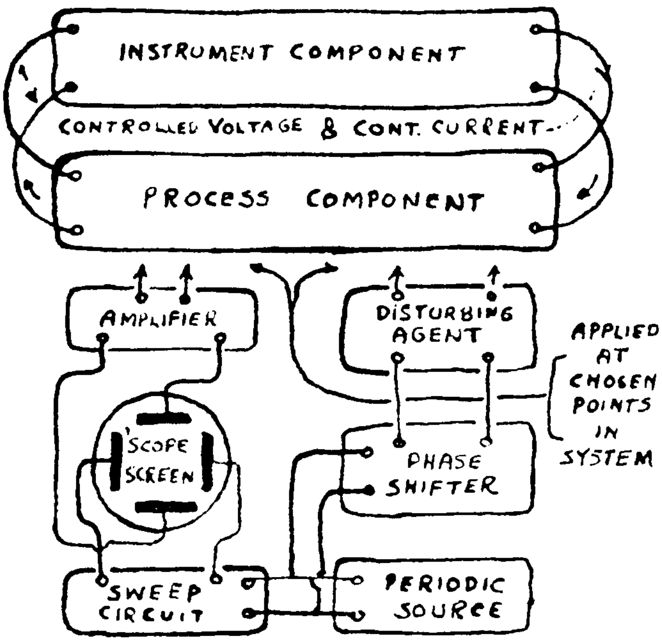

Figure 5. The simulated process and instrument components (*top*) were attached to (*bottom*) an oscilloscope display screen and a mechanism for generating periodic upsets in the process or instrument variable (Philbrick 1938).

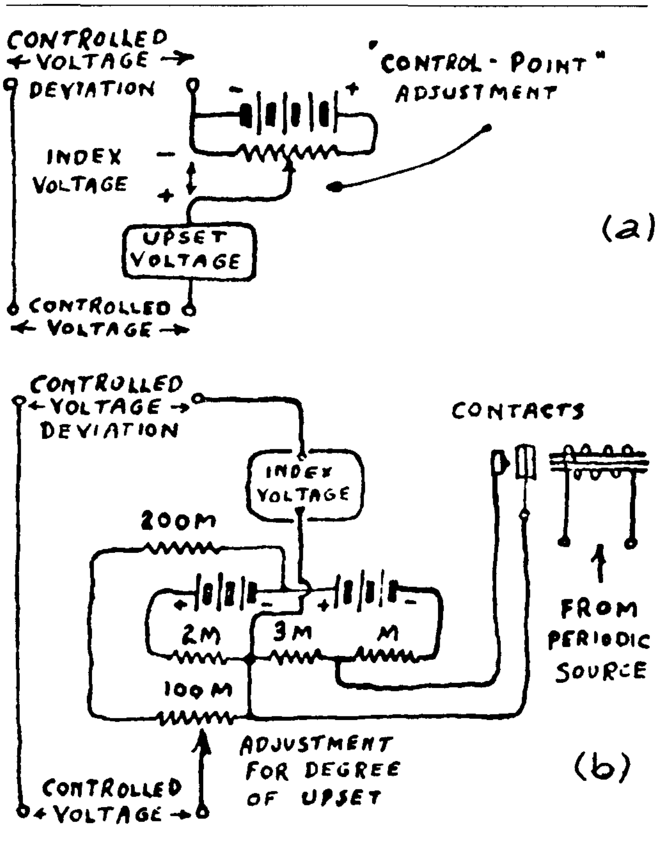

Figure 6. The method used to introduce steplike changes in the controlled-voltage deviation; (a) by changing potentiometer setting and (b) by contact closure (Philbrick 1938).

terized by a change in one of the resistances of the process, typically R_a. A manner in which the electrical counterpart of such a resistance could be alternately increased and reduced by equal and adjustable amounts is shown in Figure 7. The value of the resistance to be changed as an element of the process was shown as the one connected between the terminals marked I and II.

By similar methods, Philbrick could introduce all kinds of upsets throughout the system. These include changes in other constants of the process, changes in control points of the flow controller, sudden changes in upstream pressure in the case of a controlled valve with no flow controller, and so on. He also found it possible to combine various sorts of upsets as disturbances in order to determine their resultant effect, whether they occurred simultaneously or were distributed over a short time interval.

Circuit Details of Process

The circuit of the process component itself more or less resembled that shown in Figure 2(b), except that the number and arrangement of resistances and capacitances varied, depending on the nature of the represented processes. Philbrick also considered the possible addition of such discontinuous characteristics as a dead-time filter circuit.

Figure 8 describes Philbrick's circuit for representing a process made up of four tanks and four resistances that were made to assume a variety of forms. Each element could be varied over a considerable range or omitted completely if a process was desired that contained fewer tanks and resistances. There would be nothing to prevent the use of more than four capacities if desired, for example, to represent more closely certain processes having distributed (instead of lumped or concentrated) constants. Most processes, however, should fall into classes for which a representation is obtainable from the circuit of Figure 8.

Circuit Details of Instrument Components

The mode of carrying the measured (and usually controlled) variable from the process to the instrument component was mentioned earlier as an example of

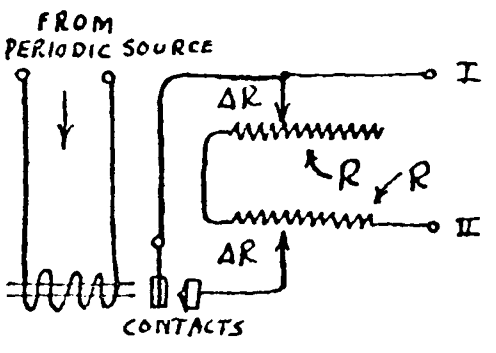

Figure 7. Upsets could be introduced in any electrical voltage by a relay-operated contact set (Philbrick 1938).

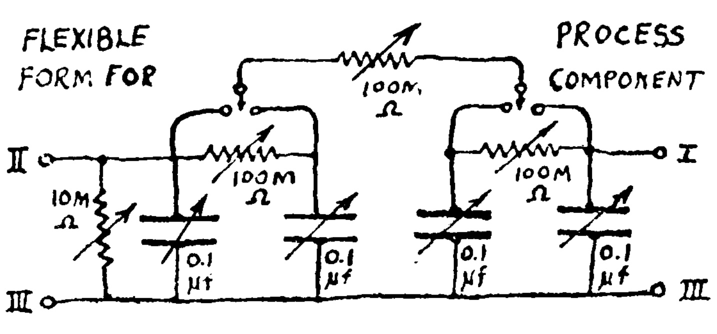

Figure 8. The four-tank, four-restriction process could be arranged into a wide variety of configurations (Philbrick 1938).

how the various equivalent electrical adjustments were obtained. This involved a description of the devices for the establishment of control point and for the type of upset that consists of a sudden change of control point. In Figures 6(a) and 6(b), the terminals marked *controlled voltage* could, of course, be applied at the point in the process component where the variable under control was located. Thus in the process shown in Figure 2(a), if T_a were to be controlled, the controlled-voltage terminals in Figures 6(a) and 6(b) would be applied to measure T_a (Figure 2(b)) by placing them across the element A_n. If T_i were to be controlled, these terminals would be placed across A_n.

Amplifier Gain

In the instrument component Philbrick used vacuum-tube amplifiers with the sole purpose of linear amplification of voltages. His maximum allowable distortion in these amplifiers had to be less than the minimum amount that could have a perceptible effect on the overall operation of the unit. He determined that direct-coupled amplifiers, although ostensibly convenient for this purpose, would have certain definite drawbacks. The most important and well known of these is the tendency of the vacuum-tube characteristic to drift over a period of time. Direct-current amplifiers would necessitate a program of careful recalibration each time the analyzer was used, if the desired consistency of results was to be realized. Capacitance-coupled amplifiers, on the other hand, do not have this particular drawback because separate amplifier stages are isolated by individual coupling capacitances. A small amount of distortion, however, is usually unavoidable with capacitance-coupled amplification (although far less than with the impedance or transformer-coupled variety). Philbrick found that for the sort of transient waves he wished to amplify, this residual distortion could be made negligible by the proper choice of coupling resistors and capacitors. Thus the selection of capacitance-coupled amplifiers was a far-reaching decision Philbrick made—probably the most logical one for his particular purpose. The alternating-current coupling of amplifier stages was later maintained in his general-purpose analog computer designs.

Proportional Action

As seen in Figure 3, a circuit had to be included that would simulate the discontinuous nature of the throttle range. The relationship between the input and the output of such a circuit had the characteristics shown in Figure 4. The curves (a) and (b) of Figure 4 indicate the effect of a change in amplification at a point in the instrument component before the throttle-range simulator. This corresponded to a change in the throttle range of a pneumatic proportional controller that would give half of maximum operating pressure when the controlled variable was in the center of the proportional band, and give zero or maximum operating pressure when it was at one end or the other of the proportional band. These characteristics had to be independent of the width of the proportional band. Philbrick's circuit, which had these characteristics, is shown in Figure 9.

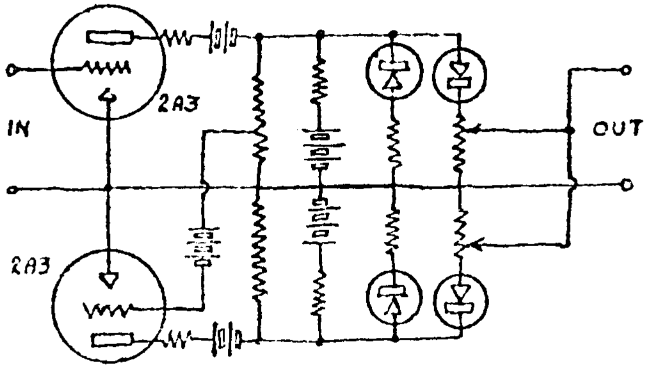

Figure 9. The electrical circuit for simulating a proportional (throttle-range) controller (Philbrick 1938).

Current Controller

The control of the current to the process simulator part required the use of a current controller. Such a controller had to be capable of being reset, much as an industrial flow controller is reset by another controlling instrument. In the electrical representation however, Philbrick found that he could achieve a practically perfect flow control simply by manipulating certain magnitudes.

If he connected a voltage across a resistance of a certain value (for example, 10,000 ohms), and if this resistance were put in series with a much larger resistance (for example, 3 megohms) and also in series with terminals I and III of the process-component circuit of Figure 8, then the current flowing into this circuit (and hence into the process-simulator part) would be a direct function of the voltage impressed. This would hold true to within less than 1 percent no matter what transient conditions existed in the process component, as a result of the large value of the 3-megohm current-limiting resistor. If the impressed voltage were made a direct and unchanging function of the output of the throttle-range simulator in such a manner that the current to the process component were zero when the

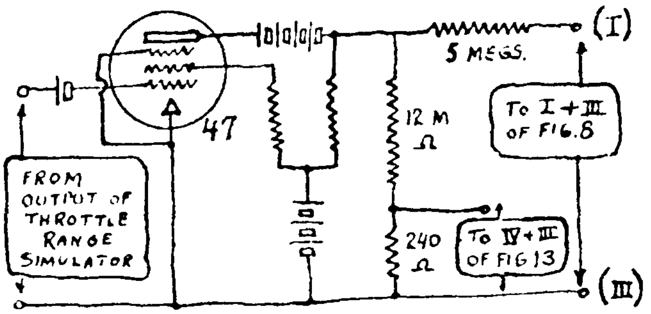

Figure 10. The "current controller" circuit (Philbrick 1938).

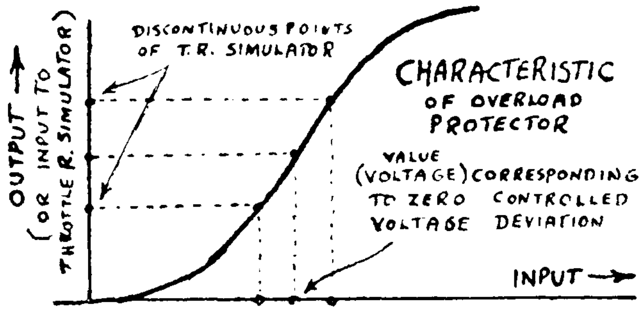

Figure 11. The characteristics of an overload protector (Philbrick 1938).

control-valve bonnet pressure fell to zero, then the maximum current could be set by adjusting the current-limiting resistor. A circuit for accomplishing this is shown in Figure 10.

Proportional Controller

Philbrick's circuit for a proportional controller connected to a process (Figure 11) shows only a single amplifier. More specifically, this amplifier itself was composed of several parts. The first part was a fixed initial amplifier that gave a constant amplification to the controlled-voltage deviation. An adjustable gain for the whole amplifier system was then provided by a potentiometer circuit in the output of this first amplifier designed to give the same output when the controlled-voltage deviation was zero, independent of the amount of gain employed. As previously mentioned, the amount of gain to be used at this point was determined by the proportional band that Philbrick wanted to simulate. The less gain used, the greater would be the proportional range. Evidently if the gain

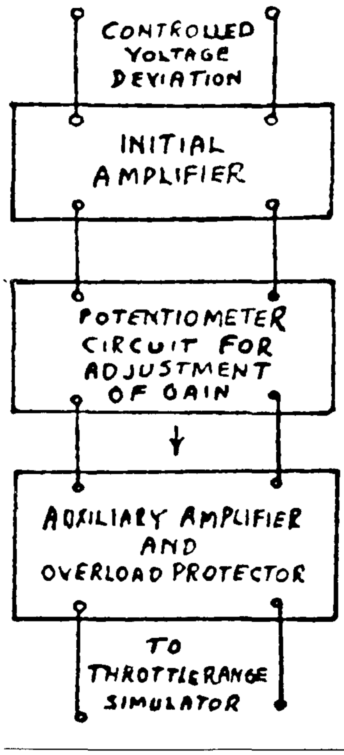

Figure 12. Block diagram of an amplifier with adjustable gain (Philbrick 1938).

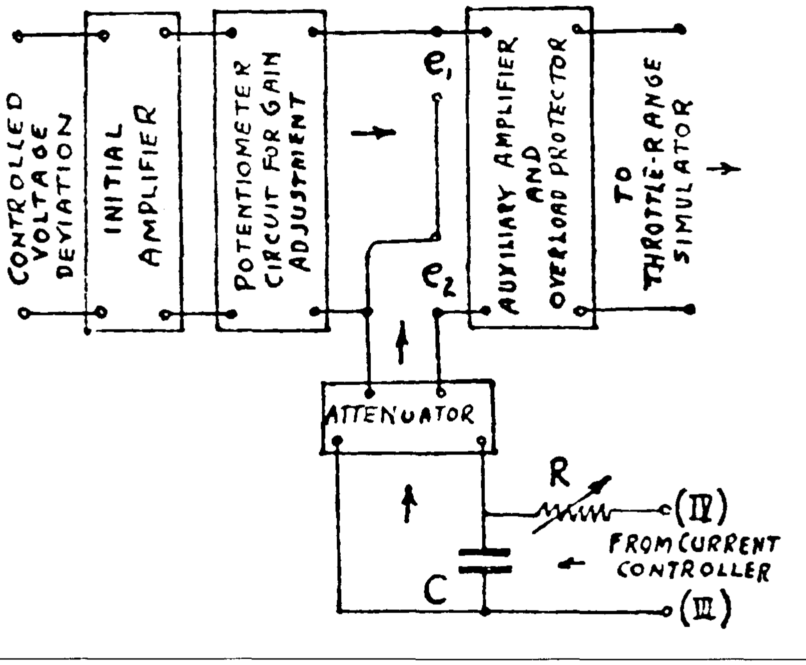

Figure 13. Circuit showing how the Stabilog controller could be simulated by modifying the amplifier shown in Figure 12 (Philbrick 1938).

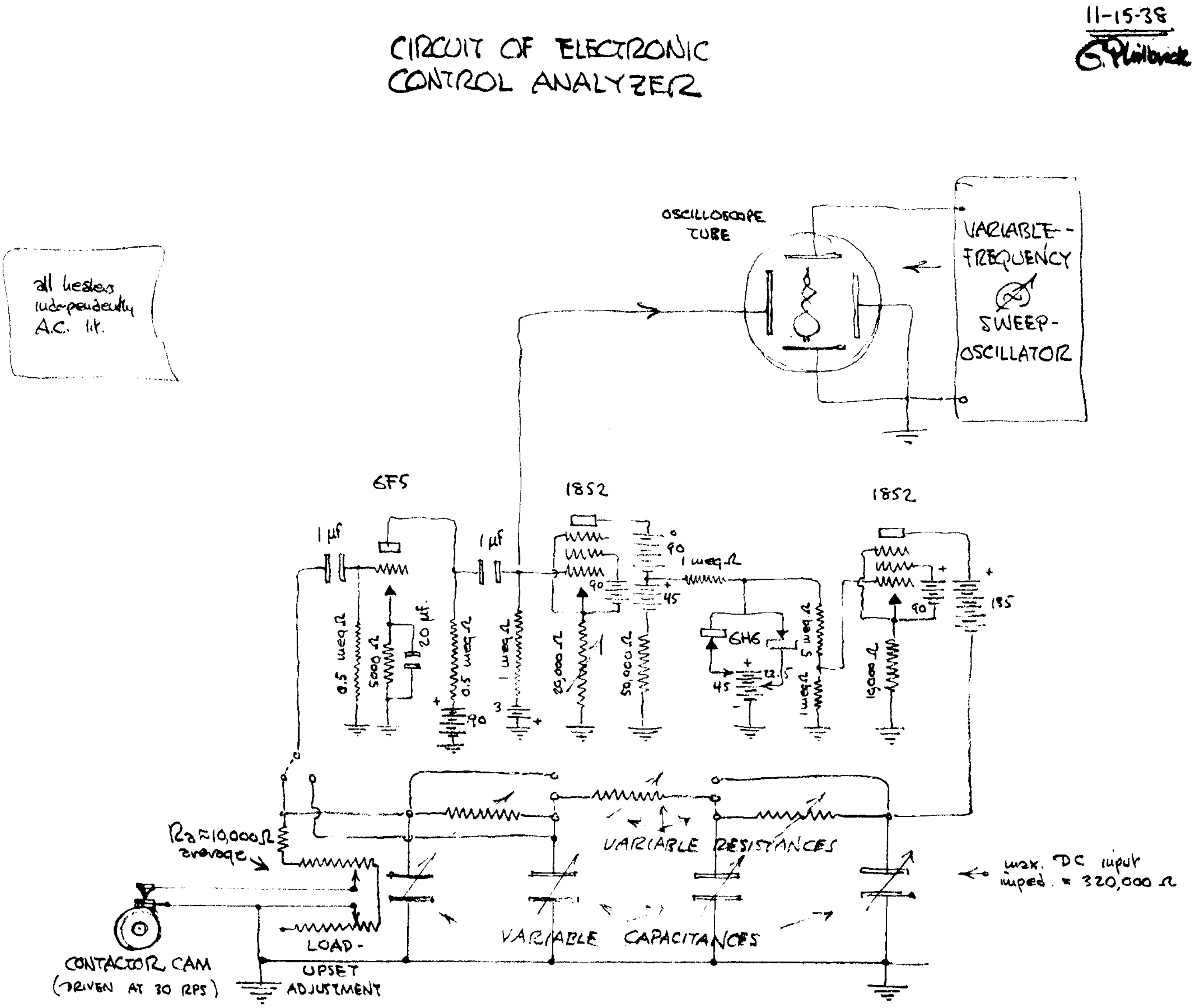

Figure 14. From Philbrick's lab notebook: the circuit for an electronic control analyzer, dated November 15, 1938 (Holst 1971).

were to be adjusted over a wide band, then the range of voltages presented to the proportional-band simulator would vary from exceedingly small (large proportional bands, low gain) to enormous (small proportional bands, high gain).

To obviate the expensive necessity of designing the input circuit of the proportional-band simulator to withstand high voltages and still be sufficiently sensitive to relatively low ones, Philbrick found it advisable to interpose an auxiliary protective device between the first amplifier and the proportional-band simulator circuit. For small proportional bands, the only significant values of input voltage are those that result in output voltages falling between the limiting points of discontinuity. Thus he found it possible to use an overload protection, with the characteristics shown in Figure 11, achieved by using an ordinary tube amplifier in which the normal linear range was exceeded.

More Advanced Controllers

In order to allow the representation of proportional controllers of the nature of the Stabilog controller, certain additions had to be made to the arrangement shown in Figure 12. If the voltage across the output of the current controller could be impressed across a resistance and a capacitance in series and the voltage of the capacitance applied—after a certain attenuation—additively in the amplifier circuit prior to the proportional-band simulator (as in Figure 13), the Stabilog controller could be simulated.

The resistance R corresponded to the reset capillary in the Stabilog pneumatic controller, and the capacitance C corresponded to the reset volume. If additional resistance and capacity in series was shunted across C, then another type of controller, the Model 30, could be simulated. By similar additions and modifications, still further types of controllers and control accessories, such as impulsators, could be included.

Resultant Design

The resultant electronic design is summarized in Figure 14, reproduced from Philbrick's lab notebook (dated November 15, 1938). The analyzer had the following design parameters.

1. Three pentode vacuum tubes, Type 1852, with independently heated (by alternating current) cathodes, and with 90-volt anode batteries.
2. One dual rectifier diode vacuum tube, Type 6H6, with two anode batteries (22.5 volts).
3. A mechanical-contact closure mechanism driven by an electric motor to generate the reset-and-start-again computational cycle 30 times per second.
4. One Dumont 5-inch cathode-ray tube oscillograph (his wording), Type 208, manually adjusted to sweep horizontally with time in synchronism with the mechanical reset cycles, and displaying vertically the selected time-dependent process variable of interest.
5. A passive, four time-constant, manually selected r-c network for adjusting the "process" to the desired characteristics.

Polyphemus

The final electronic system was assembled and wired up in a standard 19-inch lab rack, with the anode batteries at the bottom and the Dumont oscilloscope at the top. The 5-inch screen was the only way by which data could be read out from the simulator. Thus if it should fail, the whole system would become blind and useless. Therefore, with appropriate flair for literary connotations, Philbrick named his single-screen analyzer Polyphemus, after the one-eyed Cyclops who, according to Greek mythology, was blinded by Odysseus. In all its years of use and during retirement, the Polyphemus simulator "eye" has remained alive and well, continuing to provide a clear view of its internal dynamic processes.

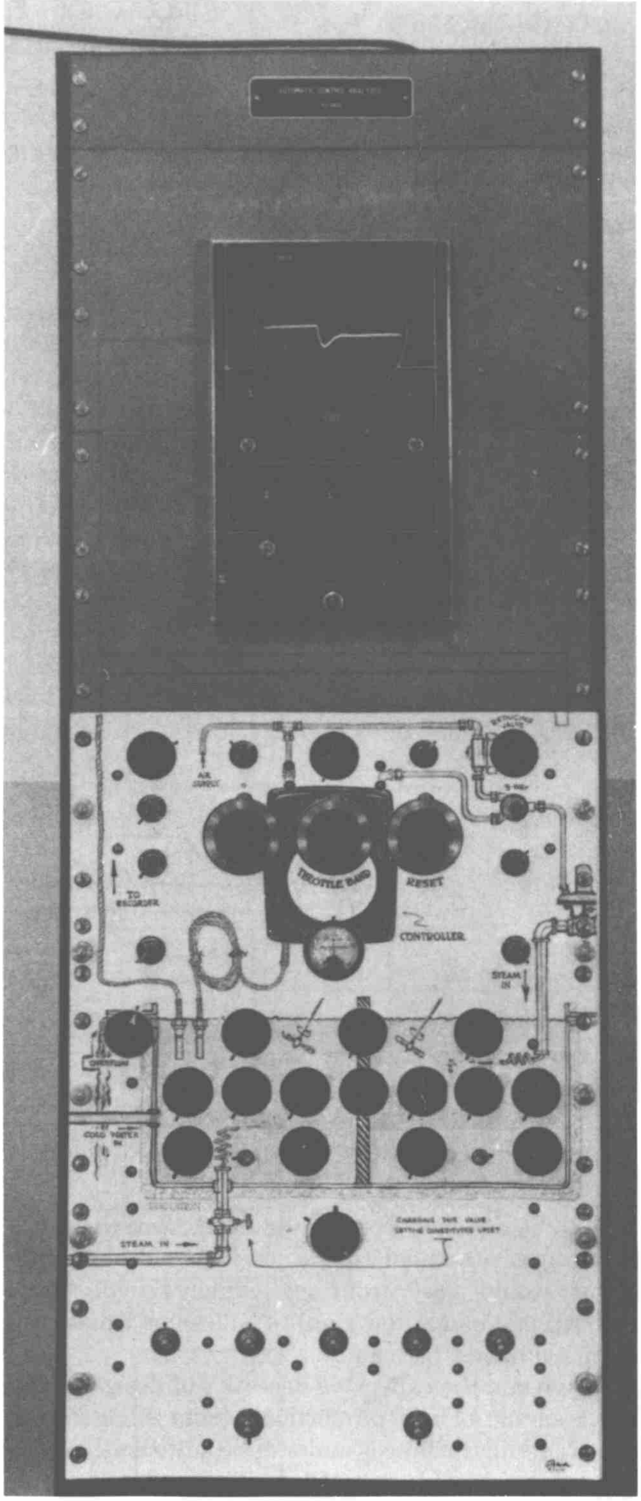

Figure 15. The front of Polyphemus, with (*top*) one Dumont Model 208 oscillograph for display and (*bottom*) an illustrated process-control problem involving a two-stage liquid bath with steam and cold water inflows (Holst 1971).

Figure 15 shows the front of the assembled components. On the front face of the analyzer was mounted

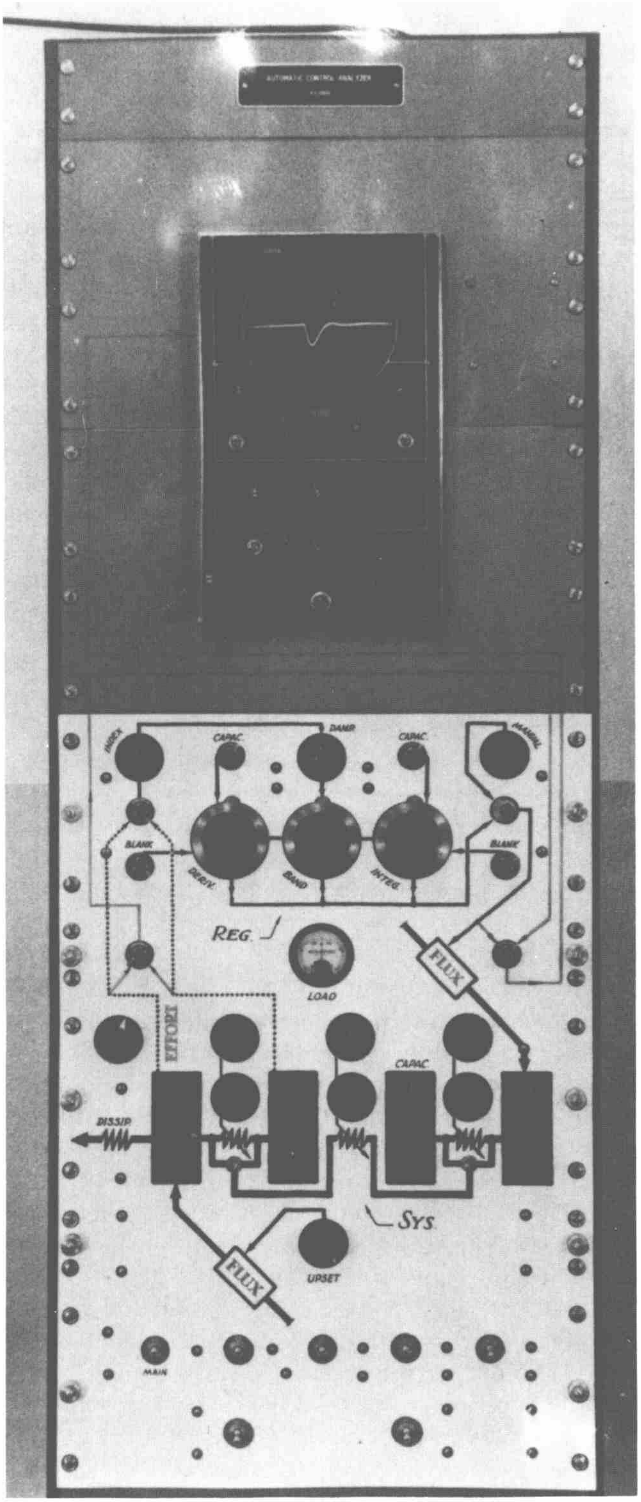

Figure 16. Another "face plate" that could be attached to the Polyphemus simulator to provide an alternate process perhaps more familiar to the audience (Holst 1971).

a removable cardboard panel vividly depicting a typical controller application, such as the liquid-steam mixing-bath diagram shown in Figure 15 (bottom). This graphic illustration of the model, or of the system being simulated, was of great benefit to the user or student who was attempting to grasp the significance of the basic control concept being shown with this "new-fangled device." By replacing the cardboard panel—perhaps with one showing a process more familiar to the user—a wide range of applications could be demonstrated, getting the points across easily. Figure 16 shows another such scene, apparently for a thermal-process simulation. For all such applications the simulated controller and process remained the same. Only the interpretation of the variables differed.

In total, Philbrick developed half a dozen such applications for his analyzer, all involving process-control situations of interest at that time and requiring some effort to determine the optimum control configuration and parameters. Each scene was hand painted, in color, in Philbrick's inimitable style and contained a wealth of insight and experience, both in process-control dynamics and in the instruction thereof to people otherwise uninitiated in this special field.

Training Simulator

One key feature quickly stimulated interest: the electronic analyzer and its various applications turned out to be a superior instructional device. In just a few minutes of demonstration, it could impart considerable knowledge of process dynamics, controller tuning, and the effects of load and control-point upsets.

The basic design of the analyzer was nothing more than a clever hands-on trainer in which some two dozen controls could be manipulated by the student. Some of these controls effected major changes in the simulated process, altering it from a rather docile, easily controlled, thermal-lag type to a highly interacting, nonlinear process requiring precise controller action.

Similarly, the controller itself (the regulator) could be varied over a broad range to provide controller actions appropriate for the different processes being simulated. Philbrick's front panels depicted a controller that could be either pneumatic (Figure 15) or electric (Figure 16). It came with three controller actions: proportional (throttle-band), integral (reset), and derivative. The controller could be switched between a manual mode and automatic, and it was furnished with an operator-adjusted set point (control point). The process controller also had several readout points so that the student could determine what was happening to the control situation.

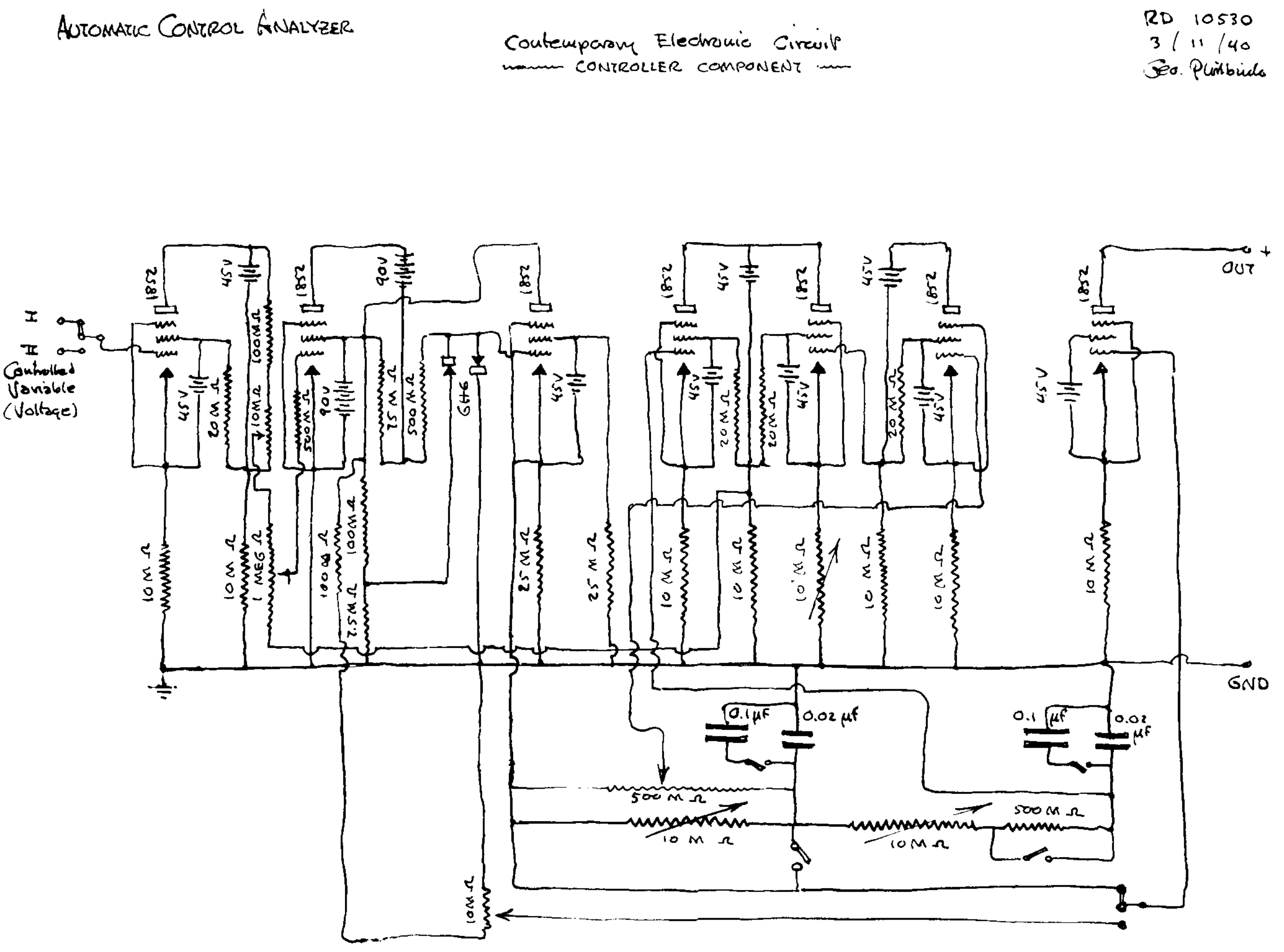

Figure 17. Seven-stage amplifier for simulating a process controller; from Philbrick's lab notebook of March 11, 1940 (Holst 1971).

Functional Characteristics

Looking at the Polyphemus analyzer with present-day simulators in mind, one can see that it contained features appropriate in several important and recognized aspects of training applications with simulators. These include facilities for human-computer interactions, graphic display capabilities, and the use of realistic modeling representations.

As previously mentioned, the characteristic function of the analyzer was to simulate in *high speed* (compressed time scale) and with *repetitive cycling* a defined typical computational program that was provided by its hard-wired circuits. Such simulations produced time-domain step responses that were displayed graphically on the CRT screen, as shown in Figure 15. The instructor could pick out an interesting process-control situation to be evaluated and vary the controller or process parameters while watching the response. This simple system allowed the instructor to determine by direct and immediate interaction the effects of making variations in the process and controller responses, and to adjust them according to desired performance criteria.

From 1939 to 1945 Polyphemus was in constant use. It was carted around the country in the trunk of an old Nash automobile and brought to virtually every Foxboro customer for demonstration and sales support. It was also the central attraction at a number of local ASME meetings in the Northeast, where this kind of a dynamic device drew considerable attention. (Figure 19 shows Philbrick with Polyphemus.)

One such event was later recalled by J. G. Ziegler (of Ziegler-Nichols fame) in one of his memos.

> At one A.A.A.S. Gibson Island Conference, Philbrick demonstrated a beautifully conceived process analog and

> controller which displayed recovery curves on a CRT instantly. M-S-D [Mass-Spring-Damping] adherents asked him to set it for a process with only one lag element to prove their contention that controller gain could never be set high enough to produce instability. George did it reluctantly, and at their urging, finally raised it to a point that produced an oscillation. The viewers were appalled, but George explained that some little pixie in his amplifiers was supplying additional lag elements that made his process somewhat more complex than one or even two elements. (Ziegler 1975)

Follow-On

While Polyphemus worked well, it was cumbersome because of its many anode batteries. It also displayed only one response at a time. The obvious implication of this was that it would be much better to see both the upset and the response curves simultaneously. Also, its passive process network greatly limited the type of processes that could be simulated. The lack of inertial effects (complex transfer-function poles), so needed in simulation of flow processes or rotating machinery, for example, made it especially desirable to create a second-generation simulator.

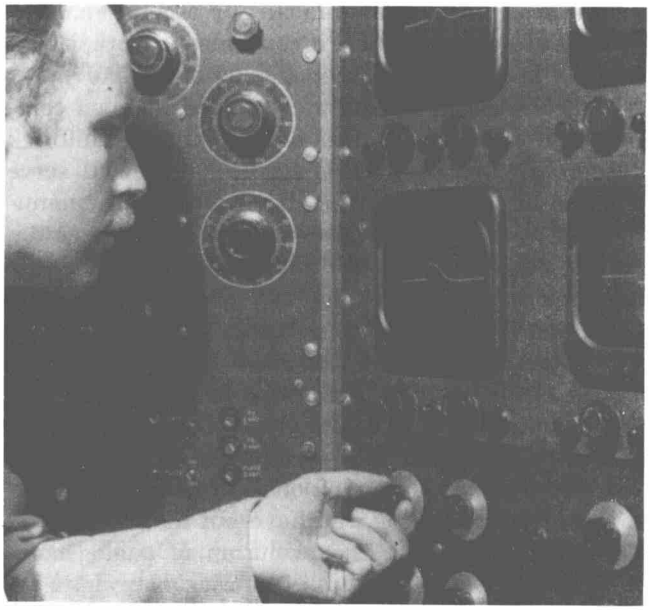

Figure 19. George A. Philbrick and Polyphemus in the mid-1940s.

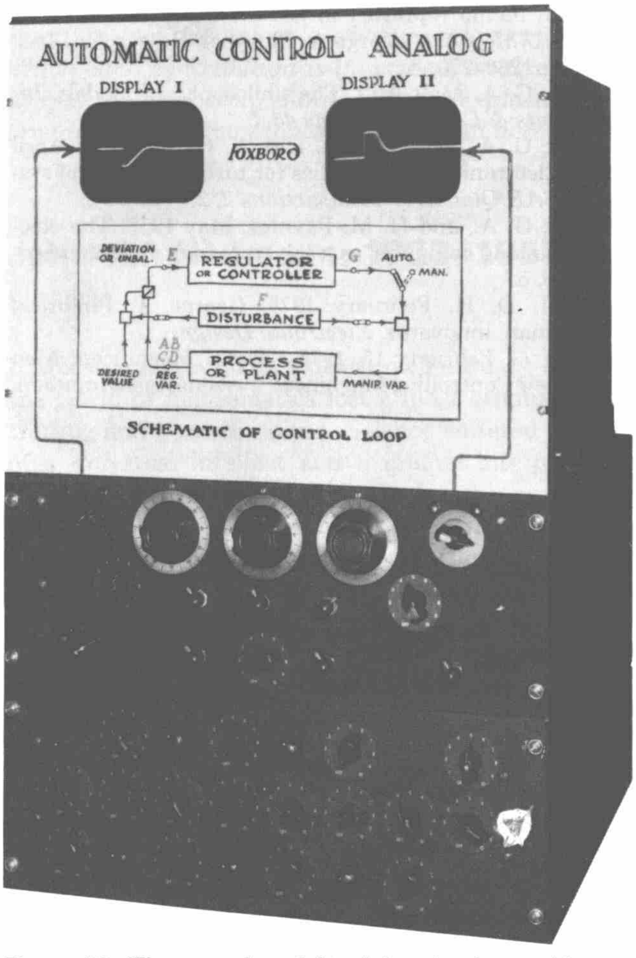

Figure 18. The second model training simulator with two Dumont oscilloscopes for displays (Foxboro files).

An upgraded version of the electric circuit for the controller function is shown in Figure 17, dated March 11, 1940. In this circuit, Philbrick has replaced his two pentodes (the 1852s) with seven others, achieving a much more independently adjustable controller, as well as one with much wider parameter ranges and better performance.

Similar improvements in the automatic reset-start-computing circuitry, as well as the insertion of step upsets, both as load changes and as set-point variations, further improved the performance of the analyzer. A second display CRT screen was added, and the new version of the analyzer was a reality.

The second generation also became very successful as an instructional tool and application engineering device. It required no batteries, since all the anodes were powered from a line-fed power supply. In its final version, it appeared as shown in Figure 18, with the same kind of replaceable front-panel illustration as had been designed for Polyphemus. It never matched the fame of its predecessor, and it never even acquired a name of its own, but it did an excellent job!

Concluding Remarks

The Polyphemus simulator was donated to the Smithsonian Institution in 1968. For many years, it was exhibited there in a display showing electronics and analog computer technology (it is now reportedly stored in a Smithsonian vault). The second analyzer remains at Foxboro, where it continues to work, its 35-year-old Dumont oscilloscopes functioning like new.

In 1946 George A. Philbrick started his own company in Boston under the name of George A. Philbrick Researches, Inc. For some years, he continued to serve as a consultant to Foxboro. His own company manufactured a number of electronic analog computers based on his initial concept of alternating-current-coupled computing units operating at high speed and with repetitive cycling.

In retrospect, it should be mentioned that reliable direct-current-coupled real-time (drift-stabilized) analog computing units became the industry norm in the mid-1950s; Philbrick, however, chose to stick to his alternating-current-coupled ones. This unique aspect of his design may very well have put his company in a sideline position in the evolution of analog computers. A second aspect was Philbrick's strong belief in *full modularity*: that the analog computer should be structured as an assemblage of interconnectable but independent black boxes; whereas the rest of the world turned toward patchboard-oriented electronic analog computers. While his preferences were perhaps not supported by the marketplace, they illustrate Philbrick's maverick approach and personal contributions.

An excellent writer, Philbrick published numerous papers and articles on the "electronic analog art," as he called it. One of his great contributions to the history of analog computing is the book his company published in 1955, *A Palimpsest on the Electronic Analog Art*, which sold for one dollar then and has since become a collector's item. It contains an invaluable set of reprints.

REFERENCES

Catheron, A. R. 1975–1976. "A More or Less Technical History of The Foxboro Company." Unpublished memorandum, 60 pp.

Holst, P. A. September 1971. A note of history. *Simulation 17*, 3, 131–135.

Holst, P. A. November 1977. Simulation at Foxboro—A look back over 40 years. *Simulation 29*, 5, 173–176.

McLeod, John. 1968. *Simulation—The Modeling of Ideas and Systems with Computers.* New York, McGraw-Hill.

Olsen, E. O. December 1980. Personal recollections of G. A. Philbrick. Private communication.

Philbrick, G. A. January 30, 1938. "An Automatic Analyzer for the Study of Controlled Systems." Internal memo, the Foxboro Company, 21 pp.

Philbrick, G. A. June 1948. Designing industrial controllers by analog. *Electronics 21*, 6, 108–111.

Philbrick, G. A. May 1949. "The High-Speed Analog as Applied to Industry." ASME Spring Meeting, New London, Conn.

Philbrick, G. A. April 4, 1950. "Process and Control Analyzer." U.S. Patent No. 2,503,213, assigned to the Foxboro Company.

Philbrick, G. A. November 1, 1951. "Continuous Electronic Representation of Nonlinear Functions of *n* Variables." Internal memo reprinted in *A Palimpsest on the Electronic Analog Art*, George A. Philbrick Researches, Inc., 1955, pp. 266–270.

Philbrick, G. A. May 1972. The philosophy of models. *Instruments & Control Systems 45*, 5.

Philbrick, G. A., W. T. Stark, and W. C. Schaeffer. April 1948. Electronic analog studies for turboprop control systems. *SAE Quarterly Transactions 2*, 2.

Philbrick, G. A., and H. M. Paynter. May 1952. The electronic analog computer as a lab tool. *Industrial Laboratories 3*, 5.

Sheingold, D. H. February 1975. George A. Philbrick: Gentleman, innovator. *Electronic Design.*

Ziegler, J. G. February 15, 1975. "Those Magnificent Men and Their Controlling Machines." Personal memorandum.