GEORGE A. PHILBRICK RESEARCHES, INC.

electronic ANALOG computing instruments

GEORGE A. PHILBRICK RESEARCHES, INC. 127 CLARENDON STREET BOSTON, MASS.

GEORGE A. PHILBRICK RESEARCHES, INC.

FEB 21 1964 Received: 3/3/64

PHILBRICK MODEL 5934 DISPLAY SYSTEM

INSTALLATION, OPERATION, and MAINTENANCE

Huntsville Rep.: W. A. Brown Associates
207 Times Building
Ph.: 536-8393

I. GENERAL DESCRIPTION

The Model 5934 Display System (see figure H) is designed to display simultaneously up to eight input signals together with a rectangular grid having the abcissae calibrated in time and ordinates, in voltage.

Thus, the signals can readily be evaluated in terms of time and voltage, and can be compared with each other. Visual accuracy is limited only by the resolution of the CRT. However, the grid and signal accuracies are dependent on the external voltage standard (from which the horizontal grid lines are developed), and the internal time standard (an oscillator, crystal controlled to better than 0.01%).

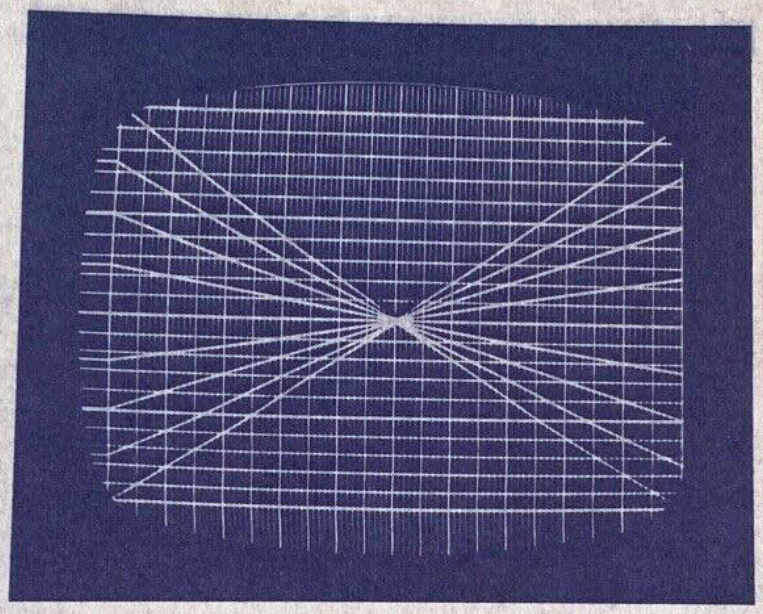

M. Eight Integrals

The horizontal deflection is produced by an analog voltage varying linearly with time. Consequently, this voltage can be slaved to another analog signal instead of to the internal time standard. Under these conditions, the system can be operated as a cross plotter, to compare one signal, as the horizontal axis with one or more signals in the vertical axis.

II. TECHNICAL DATA AND GENERAL CHARACTERISTICS

1. GENERAL

The 5934 Display System is designed so that the limit of visual accuracy is set by the best resolution of available CRT; the resolution available in present day tubes as used in

Provide the rack with a blower of at least 300 cfm at the bottom of the rack. Allow air to flow freely into the bottom of the rack, up the sides between the chassis sides and the rack side panels, and exhaust from the top.

Interconnect the chassis with the signal cables and power cables provided with the equipment. Do not apply power unless all chassis interconnections are made.

CAUTION

The power input to chassis 1, 2, and 3 must be connected directly to the system power supply not through the reference power supply connectors. Connect the reference supply (5934-5) to the system power supply through a separate connector cable.

When installing the 5934 Display System it should be located as closely as possible to any device that may require occasional readjustments or a special set-up procedure where it is important to monitor the output. A typical case of this is setting up the GAP/R Model FF Analog Function Generator. The ease with which this can be accomplished using the 5934 can be seen in figure L.

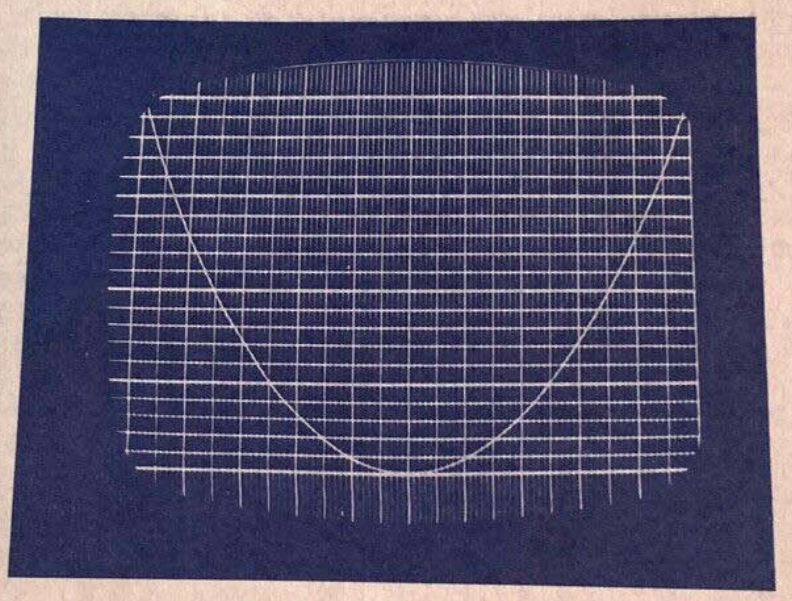

L. Parabola

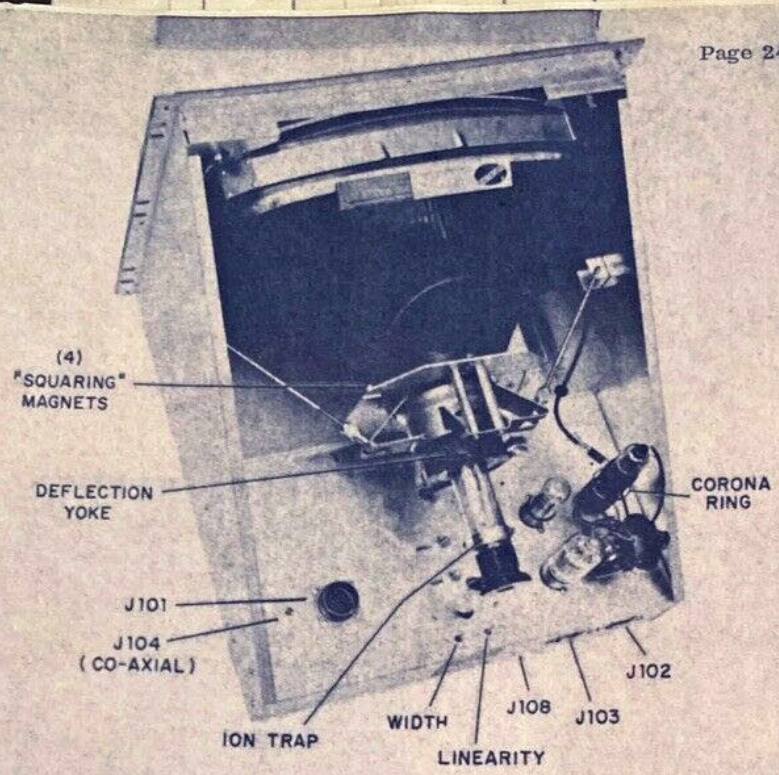

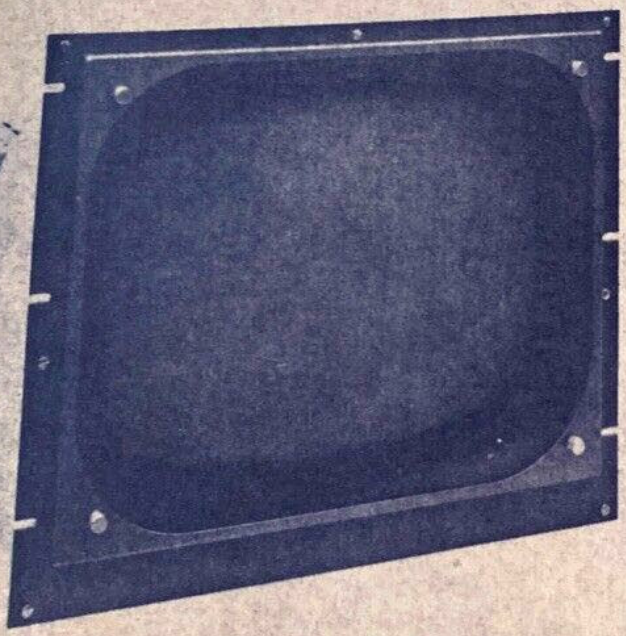

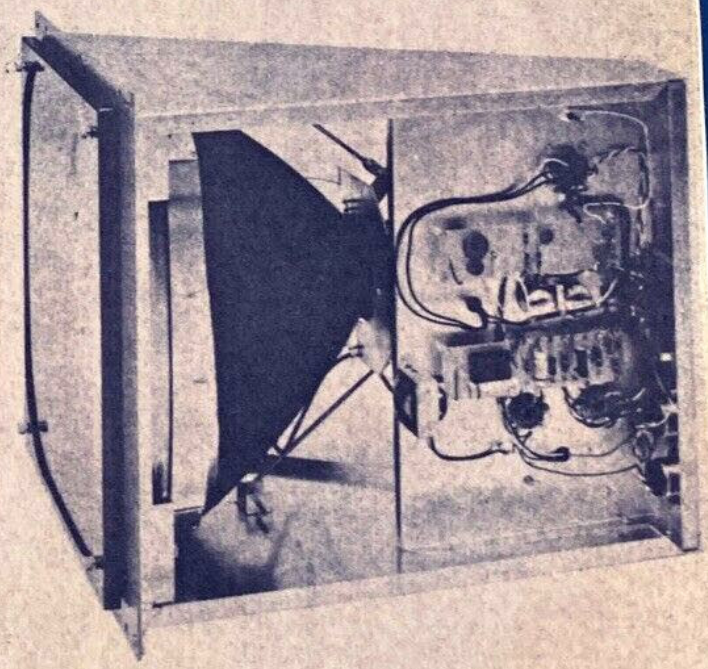

FIGURE A. PHILBRICK MODEL 5934 DISPLAY SYSTEM
CHASSIS 1, CRT

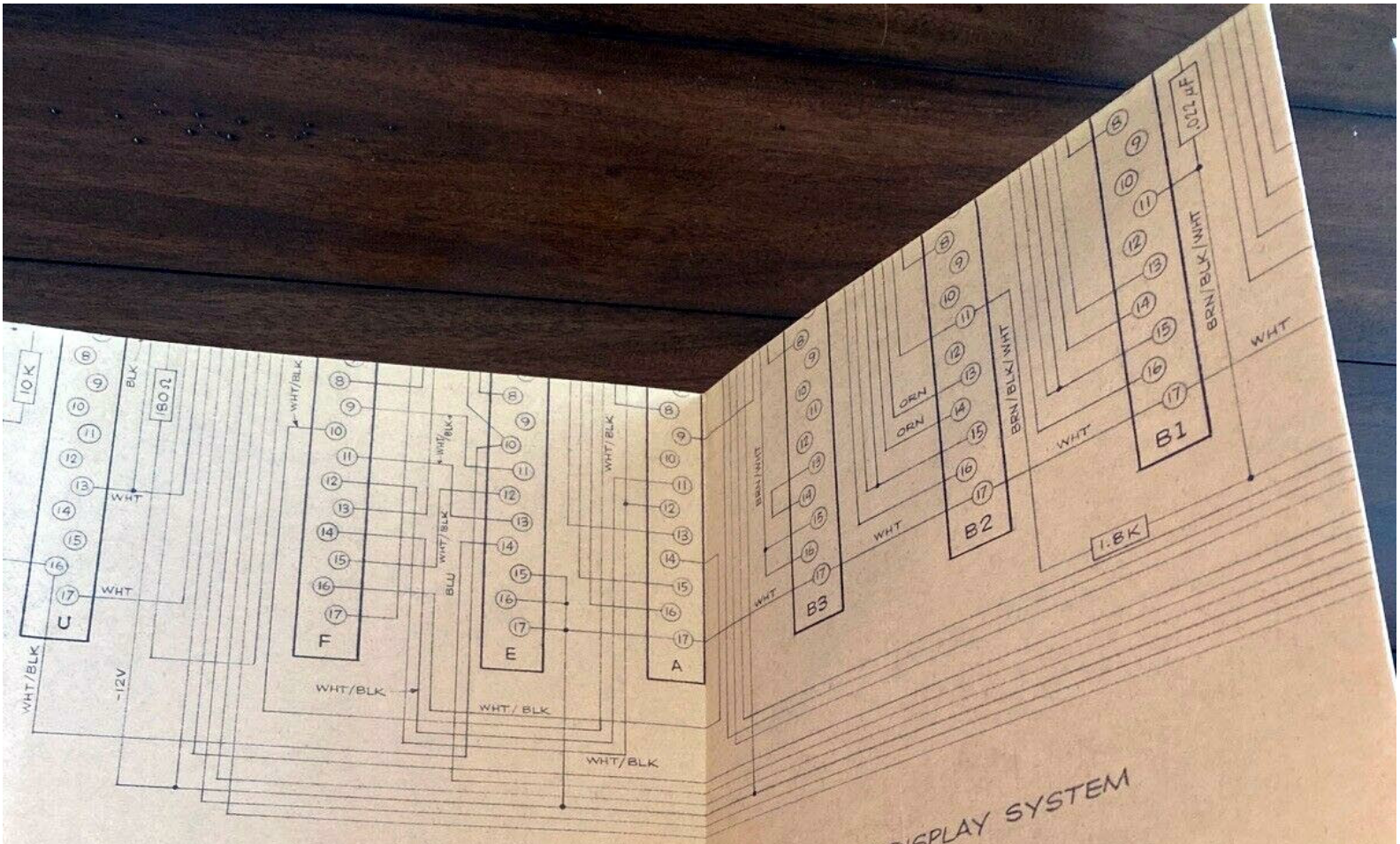

FIGURE FF. PHILBRICK MODEL 5934 DISPLAY SYSTEM
MODULE 8, CHASSIS 2

SYM	REVISION	DATE	APP.
C	REDRAWN FROM "D" to "C" SIZE	12/28/62	D.E.

ELECTRICAL

TUBES OR SEMICON

CAPACITORS:

RESISTORS: K —

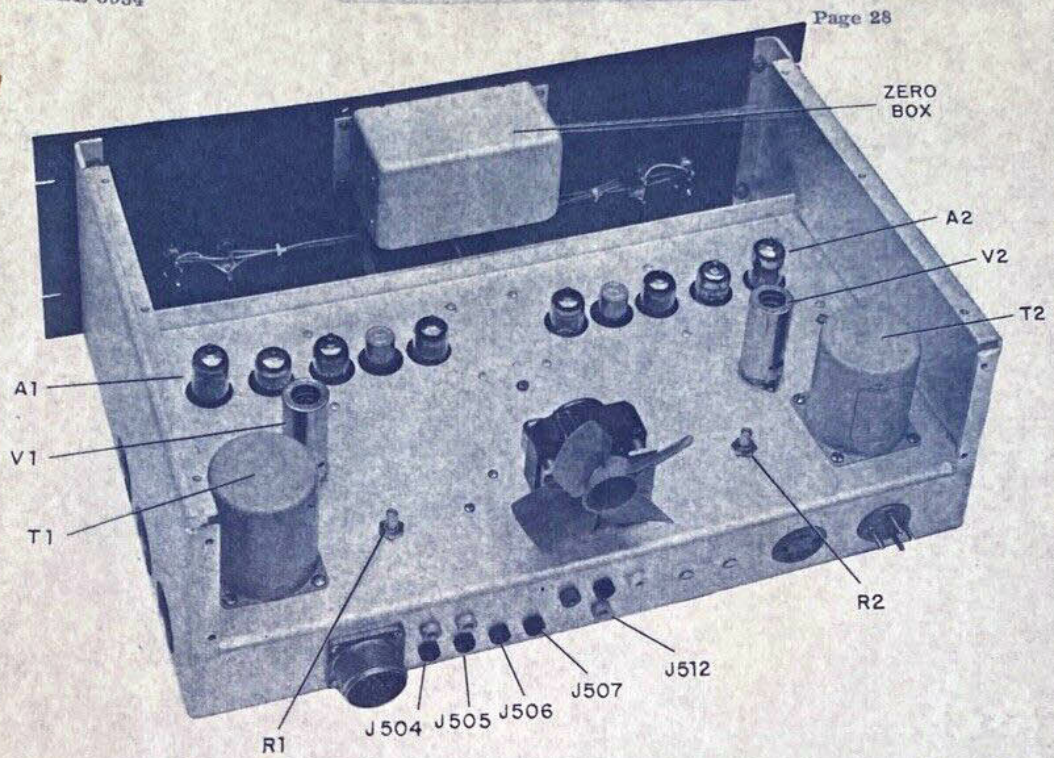

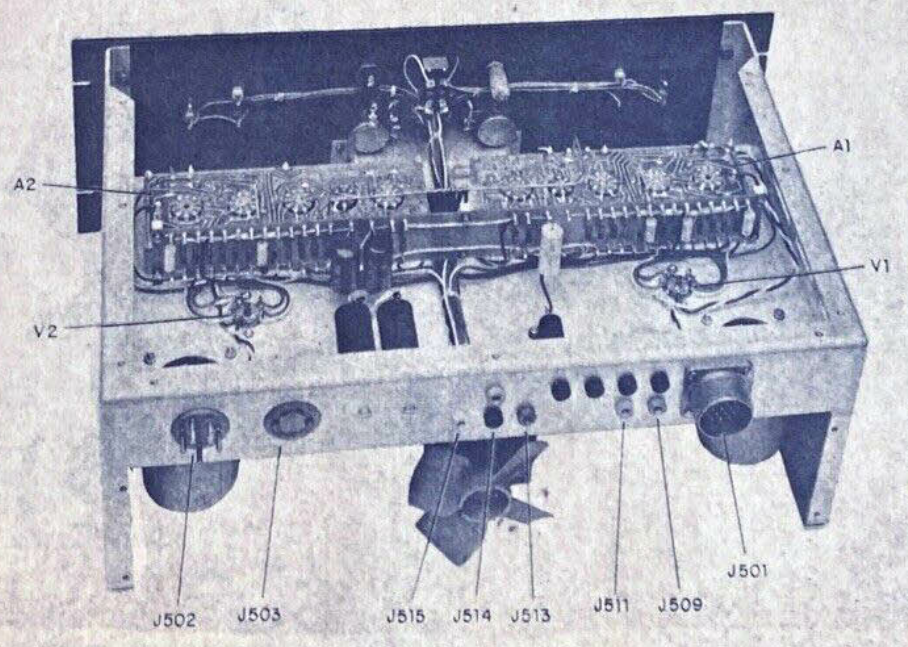

FIGURE E. PHILBRICK MODEL 5934 DISPLAY SYSTEM
CHASSIS 5, REFERENCE POWER SUPPLY, TOP & BOTTOM VIEW

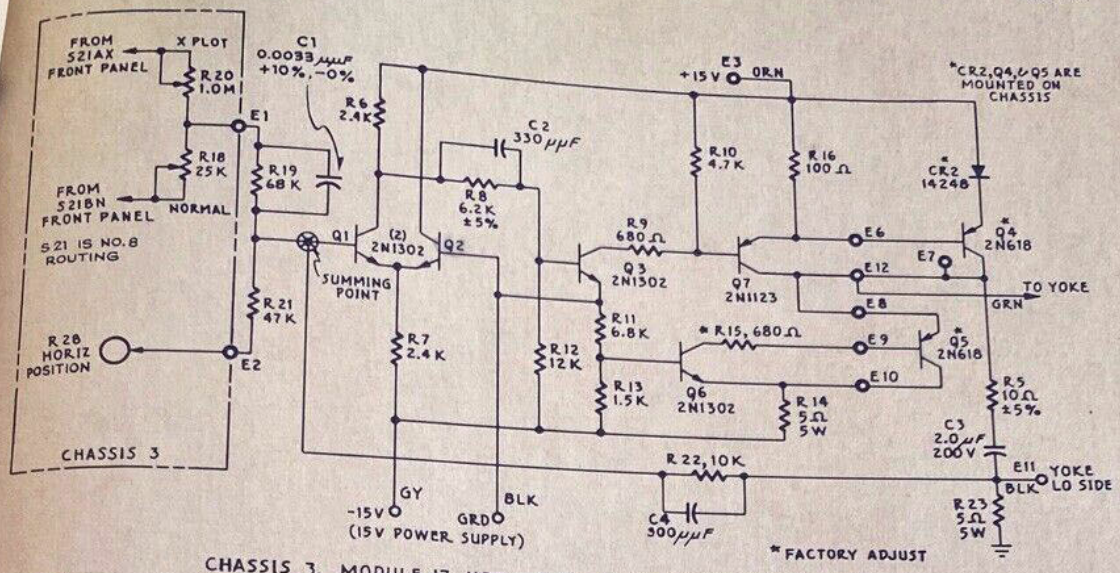

CHASSIS 3. MODULE 17, HORIZONTAL DEFLECTION AMPLIFIER

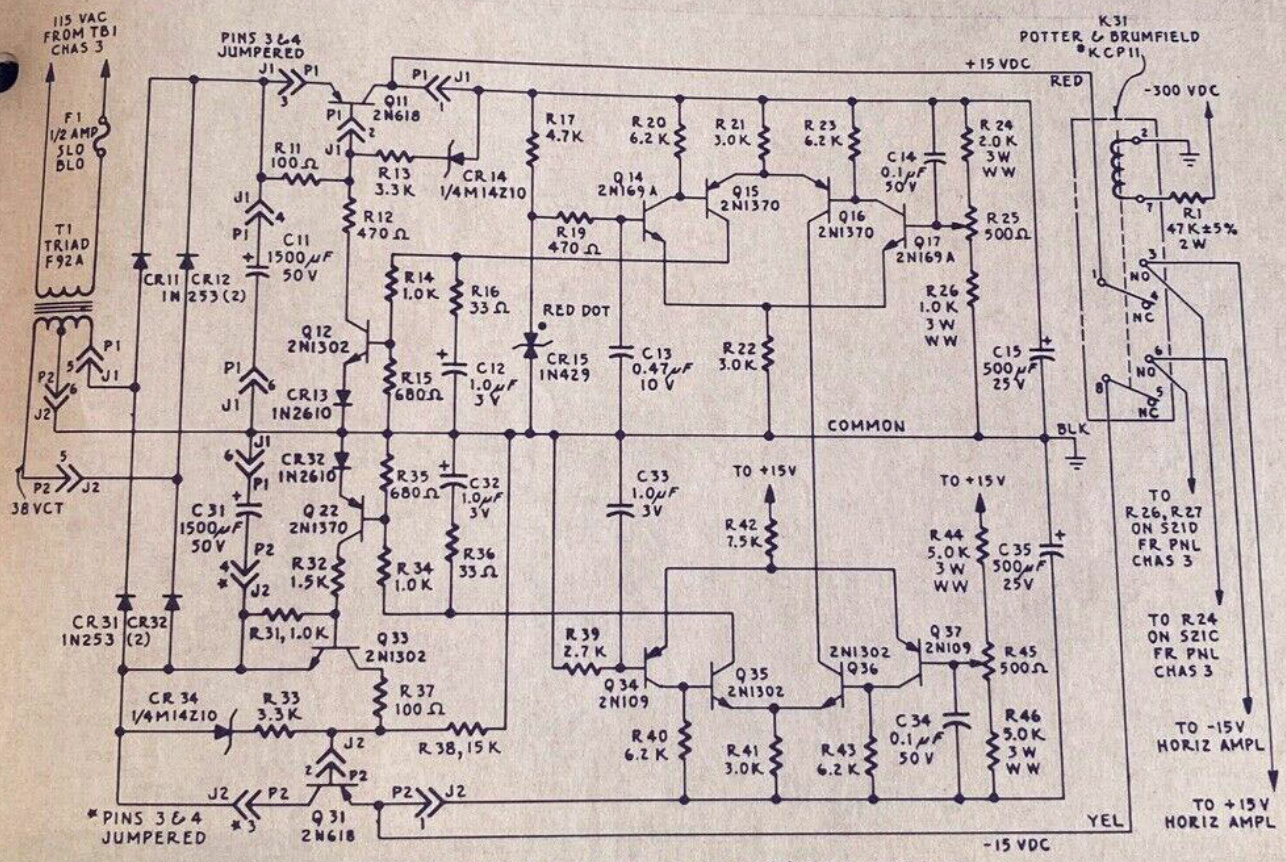

CHASSIS 3. MODULE 15-16, 15 VOLT POWER SUPPLY

FIGURE MM, PHILBRICK MODEL 5934 DISPLAY SYSTEM

Rev. 9-6-61

Rev. 9-6-61

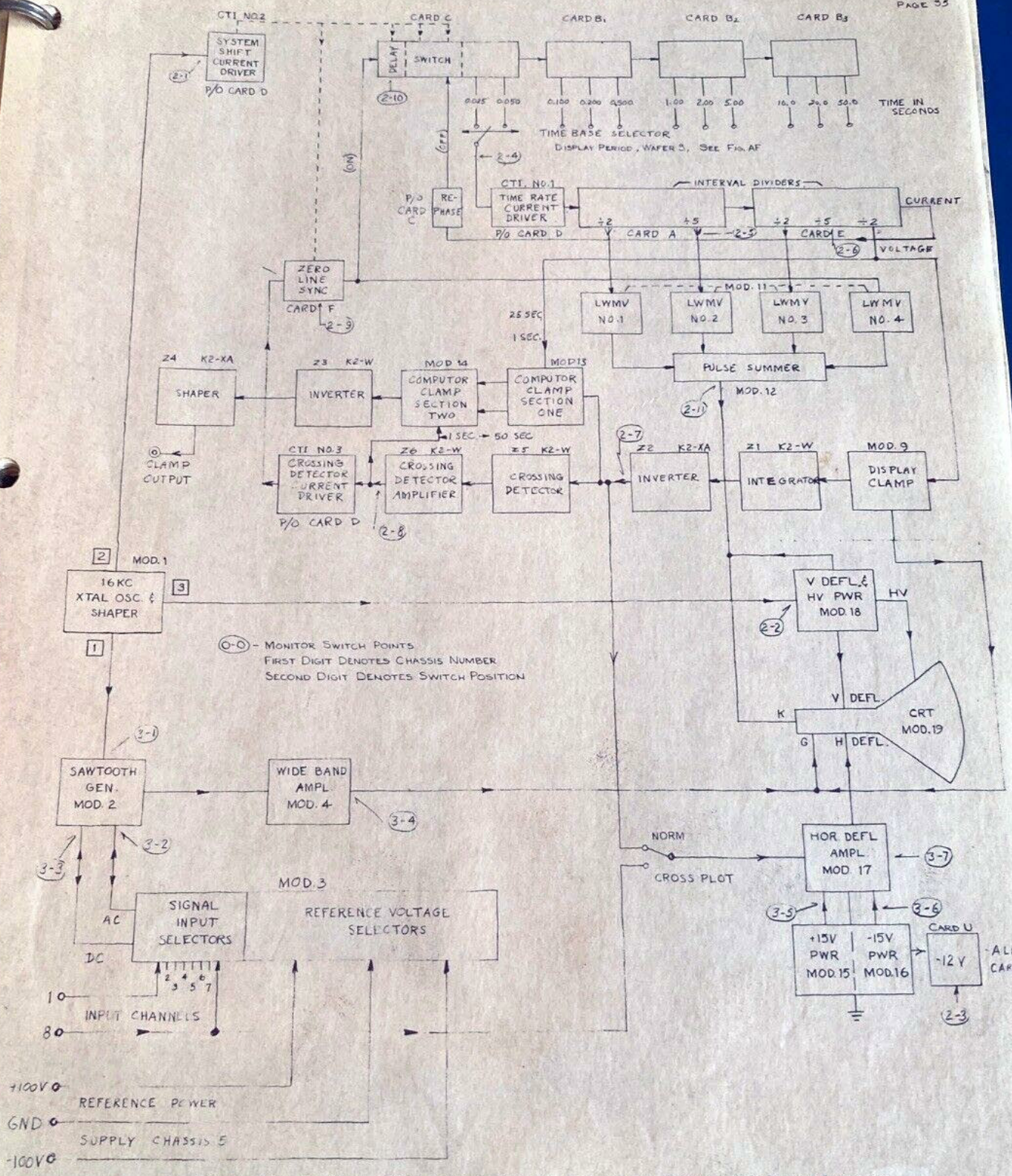

FIG. V. PHILBRICK MODEL 5934 DISPLAY SYSTEM. HORIZONTAL TIMING LOOP BLOCK DIAGRAM

b. Input Unit (chassis 3)

TIME - CALIBRATION - Turns off or on the time reference line.

VOLTAGE - CALIBRATION - Turns off or on the voltage reference lines.

HORIZONTAL POSITION - Horizontally positions the graph and displayed signals on the CRT in both the "NORMAL" and "CROSS PLOT" modes.

INPUTS 1-8

OFF - Turns off display of signal and mechanically interrupts signal path

1. - Low intensity display of signals.

2. - High intensity display of signals.

NUMBER 8 ROUTING

A separate cross plot switch connects the horizontal amplifier input to the system ramp for normal operation (NORM) or to the signal 8 input for cross plot operation. This allows a cross plot of signals 1------8 against 8. Time reference lines will be meaningless unless the input signals are synchronized with the display time selected. Full scale equals ±100 volts.

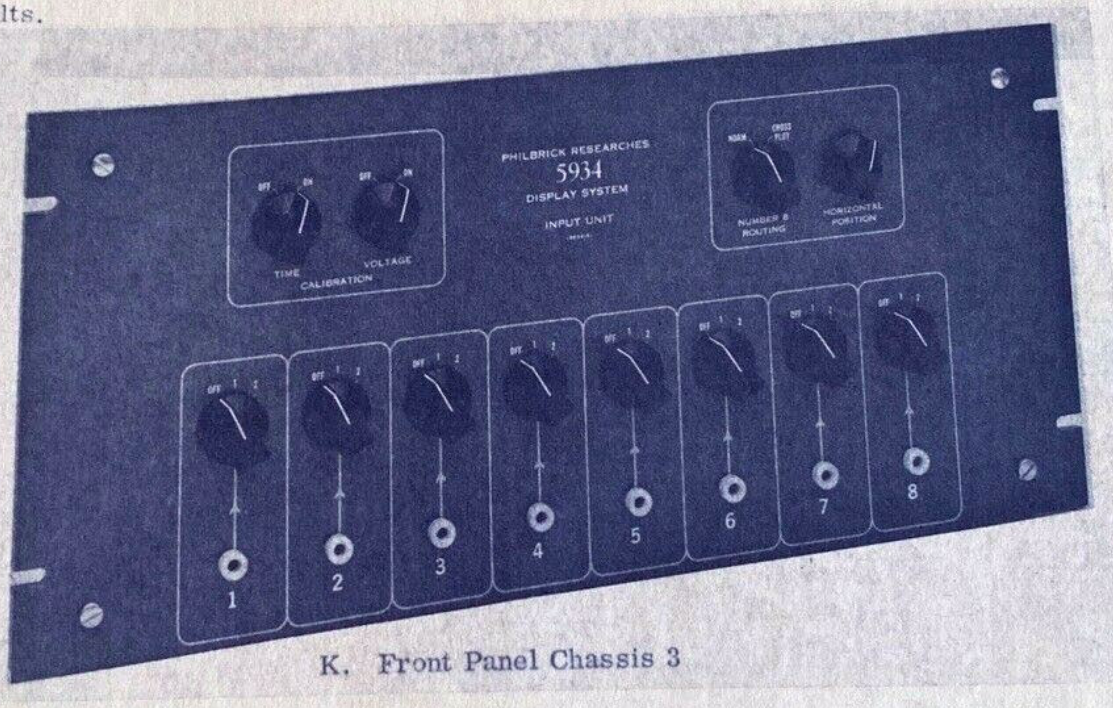

K. Front Panel Chassis 3